GPU Nuclear

GPU Nuclear Corporation
Post Office Box 480
Route 441 South
Middletown, Pennsylvania 17057-0191
717 944-7621
TELEX 84-2386
Writer's Direct Dial Number:

(717) 948-8400

November 12, 1993
C312-93-2077
C000-93-2275

US Nuclear Regulatory Commission
Attn: Document Control Desk
Washington, DC 20555

Three Mile Island Nuclear Station Unit 2 (TMI-2)
Operating License No. DPR-73
Docket No. 50-320
TMI Offsite Dose Calculation Manual

Dear Sir:

Attached is a revision to the TMI Offsite Dose Calculation Manual (ODCM) reflecting modifications that are consistent with the forthcoming condition of TMI-2, i.e., Post-Defueling Monitored Storage (PDMS). Also included in this revision to the ODCM are changes made to comply with the current version of 10 CFR 20. This revision will be in effect on January 1, 1994.

This submittal is in partial satisfaction of TMI-2 License Condition 2.F. As attested by internal documentation, this change is not an Unreviewed Safety Question as defined by 10 CFR 50.59 and, thus, it will not require NRC approval prior to its implementation on January 1, 1994.

Sincerely,

R. L. Long
Director, Services Division/TMI-2

EDS/dlb

cc: M. G. Evans - Senior Resident Inspector, TMI
T. T. Martin - Regional Administrator, Region I
M. T. Masnik - Project Manager, PDNP Directorate
L. H. Thonus - Project Manager, TMI

A009
1/1

9311180291 931112
PDR ADOCK 05000320
P PDR

GPU Nuclear	TMI Radiological Controls Departmental Procedure	Number 6610-PLN-4200.01

Title: **Offsite Dose Calculation Manual (ODCM)**

Revision No: 7

Applicability/Scope: Calculate offsite doses due to radioactive effluents for demonstrating compliance with Site Technical Specifications 10 CFR 20 & 10 CFR 50 - Appendix I

Responsible Office: 6610

Effective Date:

This document is within QA plan scope	X	Yes		No
Safety Reviews Required	X	Yes		No

List of Effective Pages

Page	Revision	Page	Revision	Page	Revision	Page	Revision
1.0	7	21.0	7	41.0	7	61.0	3
2.0	7	22.0	3	42.0	7	62.0	3
3.0	7	23.0	3	43.0	7	63.0	3
4.0	7	24.0	4	44.0	7	64.0	3
5.0	7	25.0	3	45.0	3	65.0	3
6.0	7	26.0	3	46.0	3	66.0	3
7.0	7	27.0	3	47.0	3	67.0	3
8.0	7	28.0	3	48.0	3	68.0	3
9.0	7	29.0	3	49.0	3	69.0	3
10.0	7	30.0	7	50.0	3	70.0	3
11.0	4	31.0	7	51.0	3	71.0	3
12.0	3	32.0	3	52.0	3	72.0	3
13.0	7	33.0	3	53.0	7	73.0	3
14.0	7	34.0	7	54.0	7	74.0	3
15.0	7	35.0	3	55.0	3	75.0	3
16.0	7	36.0	7	56.0	3	76.0	3
17.0	7	37.0	7	57.0	3	77.0	3
18.0	7	38.0	7	58.0	3	78.0	3
19.0	7	39.0	7	59.0	3	79.0	3
20.0	7	40.0	7	60.0	3	80.0	3

	Signature	Date
Radiological Engineer, TMI	[illegible]	11-12-93
Env. Controls	[illegible]	12 NOV 93
Manager, Rad. Eng., TMI	[illegible]	11-12-93
TMI Licensing Director	MR Knight for AW Miller	11-12-93
Chairman, TMI-2 Plant Review Group	[illegible]	11/12/93
TMI-2 Site Operations Director	[illegible]	11/12/93
Rad Con Director, TMI	[illegible] for WE Potts	11-12-93

9311180292 931112
PDR ADOCK 05000320
P PDR

List of Effective Pages (Cont'd)

Page	Revision	Page	Revision	Page	Revision	Page	Revision
81.0	3	121.0	7				
82.0	3	122.0	7				
83.0	3	123.0	7				
84.0	3	124.0	7				
85.0	3	125.0	7				
86.0	7	126.0	7				
87.0	7	127.0	7				
88.0	7	128.0	7				
89.0	4	129.0	7				
90.0	7	130.0	7				
91.0	3	131.0	7				
92.0	3	132.0	7				
93.0	3	133.0	7				
94.0	3	134.0	7				
95.0	3	E1-1	3				
96.0	4	E2-1	3				
97.0	4	E3-1	3				
98.0	3	E4-1	3				
99.0	3	E4-2	3				
100.0	3	E5-1	3				
101.0	3	E6-1	3				
102.0	3	E7-1	3				
103.0	3	E7-2	3				
104.0	3	E7-3	3				
105.0	3	E7-4	3				
106.0	3						
107.0	7						
108.0	7						
109.0	3						
110.0	7						
111.0	7						
112.0	3						
113.0	7						
114.0	3						
115.0	7						
116.0	7						
117.0	7						
118.0	7						
119.0	7						
120.0	7						

INTRODUCTION

The OFFSITE DOSE CALCULATION MANUAL (ODCM) is a supporting document of the GPUNC Three Mile Island Nuclear Station (TMINS) Unit 1 and Unit 2 PDMS Technical Specifications. The ODCM describes the methodology and parameters to be used in the calculation of off-site doses due to radioactive liquid and gaseous effluents. This document also describes the methodology used for calculation of the liquid and gaseous effluent monitoring instrumentation alarm/trip set points. Liquid and Gaseous Radwaste Treatment System configurations are also included.

The ODCM also is used to define the requirements for the TMINS radiological environmental monitoring program (REMP) and contains a list and graphical description of the specific sample locations used in the REMP.

The ODCM is maintained at the Three Mile Island (TMI) site for use as a reference guide and training document of accepted methodologies and calculations. Changes in the calculation methods or parameters will be incorporated into the ODCM to ensure the ODCM represents the present methodology in all applicable areas. GPUNC initiated changes to the ODCM will be implemented in accordance with the TMI-1 and TMI-2 PDMS Technical Specifications.

The ODCM follows the methodology and models suggested by NUREG-0133, and Regulatory Guide 1.109, Revision 1 for calculation of off-site doses due to plant effluent releases. Simplifying assumptions have been applied in this manual where applicable to provide a more workable document for implementation of the Radiological Effluent Controls requirements.

GPUN implements the TMI Radiological Effluent Controls Program and Regulatory Guide 1.21, Revision 1 (Semiannual Radioactive Effluent Release Report) requirements by use of a computerized system used to determine TMI effluent releases and to update cumulative effluent doses.

TABLE OF CONTENTS

Section		Page
PART I	**EFFLUENT DATA AND CALCULATIONAL METHODOLOGIES**	
1.0	**LIQUID EFFLUENT MONITORS**	13.0
1.1	TMI-1 and TMI-2 Liquid Radiation Monitor Set Points	13.0
1.2	TMI Liquid Release Points and Liquid Radiation Monitor Data	14.0
1.3	Control of Liquid Releases	17.0
2.0	**LIQUID EFFLUENT DOSE ASSESSMENT**	22.0
2.1	Liquid Effluents - 10 CFR 50 Appendix I	22.0
2.2	TMI-1 Liquid Radwaste System Dose Calcs Once per Month	24.0
2.3	Alternative Dose Calculational Methodology	25.0
3.0	**LIQUID EFFLUENT WASTE TREATMENT SYSTEM**	30.0
3.1	TMI-1 Liquid Effluent Waste Treatment System	30.0
3.2	Operability of TMI-1 Liquid Effluent Waste Treatment System	31.0
3.3	TMI-2 Liquid Effluent Waste Treatment System	31.0
4.0	**GASEOUS EFFLUENT MONITORS**	34.0
4.1	TMI-1 Noble Gas Monitor Set Points	34.0
4.2	TMI-1 Particulate and Radioiodine Monitor Set Points	36.0
4.3	TMI-2 Gaseous Radiation Monitor Set Points	37.0
4.4	TMI-1 Gaseous Effluent Release Points and Gaseous Radiation Monitor Data	38.0
4.5	TMI-2 Gaseous Effluent Release Points and Gaseous Radiation Monitor Data	40.0
4.6	Control of Gaseous Effluent Releases	42.0
5.0	**GASEOUS EFFLUENT DOSE ASSESSMENT**	54.0
5.1	Gaseous Effluents - Dose Rate Limits	54.0
5.1.1	Noble Gases	54.0

TABLE OF CONTENTS (Cont'd)

PART I EFFLUENT DATA AND CALCULATIONAL METHODOLOGIES

Section		Page
	5.1.1.1 Total Body	54.0
	5.1.1.2 Skin	55.0
	5.1.2 Iodines and Particulates	56.0
5.2	Gaseous Effluents - 10 CFR 50 Appendix I	57.0
	5.2.1 Noble Gases	57.0
	5.2.2 Iodines and Particulates	58.0
5.3	Gaseous Radioactive System Dose Calculations Once per Month	60.0
5.4	Alternative Dose Calculational Methodologies	61.0
6.0	GASEOUS EFFLUENT WASTE TREATMENT SYSTEM	83.0
6.1	Description of the TMI-1 Gaseous Radwaste Treatment System	83.0
6.2	Operability of the TMI-1 Gaseous Radwaste Treatment System	83.0
7.0	EFFLUENT TOTAL DOSE ASSESSMENT	85.0
8.0	TMINS RADIOLOGICAL ENVIRONMENTAL MONITORING PROGRAM (REMP)	86.0
8.1	Monitoring Program Requirements	86.0
8.2	Land Use Census	88.0
8.3	Interlaboratory Comparison Program	90.0
9.0	PART I REFERENCES	107.0

TABLE OF CONTENTS (Cont'd)

PART I EFFLUENT DATA AND CALCULATIONAL METHODOLOGIES

Section		Page
TABLES		
Table 1.1	TMI-1 Liquid Release Point and Liquid Radiation Monitor Data	18.0
Table 1.2	TMI-2 Sump Capacities	19.0
Table 2.1	Liquid Dose Conversion Factors (DCF): DF_{ij}	26.0
Table 2.2	Bioaccumulation Factors, BF_i	29.0
Table 4.1	TMI-1 Gaseous Release Point & Gaseous Radiation Monitor Data	42.0
Table 4.2	TMI-2 Gaseous Release Point & Gaseous Radiation Monitor Data	44.0
Table 4.3	Dose Factors for Noble Gases and Daughters	45.0
Table 4.4	Atmospheric Dispersion Factors for Three Mile Island - Station Vent	46.0
Table 4.5	Atmospheric Dispersion Factors for Three Mile Island - Ground Release	47.0
Table 4.6	Dose Parameters for Radioiodines and Radioactive Particulate, Gaseous, Effluents	48.0
Table 5.2.1	Pathway Dose Factors, R_i - Infant, Inhalation	62.0
Table 5.2.2	Pathway Dose Factors, R_i - Child, Inhalation	63.0
Table 5.2.3	Pathway Dose Factors, R_i - Teen, Inhalation	64.0
Table 5.2.4	Pathway Dose Factors, R_i - Adult, Inhalation	65.0
Table 5.3.1	Pathway Dose Factors, R_i - All Age Groups, Ground Plane	66.0
Table 5.4.1	Pathway Dose Factors, R_i - Infant, Grass-Cow-Milk	67.0
Table 5.4.2	Pathway Dose Factors, R_i - Child, Grass-Cow-Milk	68.0
Table 5.4.3	Pathway Dose Factors, R_i - Teen, Grass-Cow-Milk	69.0
Table 5.4.4	Pathway Dose Factors, R_i - Adult, Grass-Cow-Milk	70.0
Table 5.5.1	Pathway Dose Factors, R_i - Infant, Grass-Goat-Milk	71.0

TABLE OF CONTENTS (Cont'd)

PART I EFFLUENT DATA AND CALCULATIONAL METHODOLOGIES

Section		Page
TABLES		
Table 5.5.2	Pathway Dose Factors, R_i - Child, Grass-Goat-Milk	72.0
Table 5.5.3	Pathway Dose Factors, R_i - Teen, Grass-Goat-Milk	73.0
Table 5.5.4	Pathway Dose Factors, R_i - Adult, Grass-Goat-Milk	74.0
Table 5.6.1	Pathway Dose Factors, R_i - Infant, Grass-Cow-Meat	75.0
Table 5.6.2	Pathway Dose Factors, R_i - Child, Grass-Cow-Meat	76.0
Table 5.6.3	Pathway Dose Factors, R_i - Teen, Grass-Cow-Meat	77.0
Table 5.6.4	Pathway Dose Factors, R_i - Adult, Grass-Cow-Meat	78.0
Table 5.7.1	Pathway Dose Factors, R_i - Infant, Vegetation	79.0
Table 5.7.2	Pathway Dose Factors, R_i - Child, Vegetation	80.0
Table 5.7.3	Pathway Dose Factors, R_i - Teen, Vegetation	81.0
Table 5.7.4	Pathway Dose Factors, R_i - Adult, Vegetation	82.0
Table 8.1	Sample Collection and Analysis Requirements	91.0
Table 8.2	Reporting Levels for Radioactivity Concentrations in Environmental Samples	96.0
Table 8.3	Detection Capabilities for Environmental Sample Analysis	97.0
Table 8.4	TMINS REMP Station Locations - Air Particulate and Air Iodine	99.0
Table 8.5	TMINS REMP Station Locations - Direct Radiation (TLD)	99.0
Table 8.6	TMINS REMP Station Locations - Surface Water	101.0
Table 8.7	TMINS REMP Station Locations - Aquatic Sediment	101.0
Table 8.8	TMINS REMP Station Locations - Milk	102.0
Table 8.9	TMINS REMP Station Locations - Fish	102.0
Table 8.10	TMINS REMP Station Locations - Food Products	103.0

TABLE OF CONTENTS (Cont'd)

PART I EFFLUENT DATA AND CALCULATIONAL METHODOLOGIES

Section		Page
TABLES		
MAP 8.1	Three Mile Island Nuclear Station Locations of Radiological Environmental Monitoring Program Stations within 1 Mile of the Site	104.0
MAP 8.2	Three Mile Island Nuclear Station Locations of Radiological Environmental Monitoring Program Stations within 5 miles of the Site	105.0
MAP 8.3	Three Mile Island Nuclear Station Locations of Radiological Environmental Monitoring Program Stations Greater than 5 miles from the Site	106.0
FIGURES		
Figure 1.1	TMI-1 Liquid Effluent Pathways	20.0
Figure 1.2	TMI-2 Liquid Effluent Pathways	21.0
Figure 3.1	TMI-1 Liquid Radwaste	32.0
Figure 3.2	TMI-1 Liquid Waste Evaporators	33.0
Figure 4.1	TMI-1 Gaseous Effluent Pathways	49.0
Figure 4.2	TMI-1 Auxiliary & Fuel Handling Buildings Effluent Pathways	50.0
Figure 4.3	TMI-1 Reactor Building Effluent Pathway	51.0
Figure 4.4	TMI-1 Condenser Offgas Effluent Pathway	52.0
Figure 4.5	TMI-2 Gaseous Effluent Pathways	53.0
Figure 6.1	Waste Gas System	84.0

TABLE OF CONTENTS (Cont'd)

PART II TMI-2 RADIOLOGICAL EFFLUENT CONTROLS

Section		Page
1.0	DEFINITIONS	110.0
	Table 1.1, Frequency Notation	112.0
2.0	RADIOLOGICAL EFFLUENT REQUIREMENTS	115.0
	2.1 Radioactive Discharges	115.0
	2.1.1 Liquid Effluents	115.0
	2.1.2 Gaseous Effluents	117.0
	2.2 Radioactive Gaseous Effluent Monitoring Instrumentation	119.0
	Table 2.2-1, Radioactive Gaseous Effluent Monitoring Instrumentation	120.0
3.0	MONITORING REQUIREMENTS	121.0
	3.1 Radioactive Discharges	121.0
	3.1.1 Liquid Effluents	121.0
	3.1.2 Gaseous Effluents	121.0
	3.2 Radioactive Gaseous Effluent Monitoring Instrumentation	123.0
	Table 3.1-1, Radioactive Liquid Waste Sampling and Analysis	124.0
	Table 3.1-2, Radioactive Gaseous Waste Sampling and Analysis	125.0

TABLE OF CONTENTS (Cont'd)

PART II TMI-2 RADIOLOGICAL EFFLUENT CONTROLS

Section		Page
4.0	DESIGN FEATURES	128.0
4.1	SITE	128.0
4.1.1	Exclusion Area	128.0
4.1.2	Low Population Zone	128.0
4.1.3	Site Boundary for Gaseous Effluents	128.0
4.1.4	Site Boundary for Liquid Effluents	128.0
5.0	PART II REFERENCES	129.0

TABLE OF CONTENTS (Cont'd)

PART III REPORTING REQUIREMENTS

Section		Page
1.0	TMI ANNUAL RADIOLOGICAL ENVIRONMENTAL OPERATING REPORT	141.0
2.0	TMI ANNUAL RADIOACTIVE EFFLUENT RELEASE REPORT	142.0
3.0	PART III REFERENCES	144.0

APPENDICES

A.	Pathway Dose Rate Parameter (P_i)	E1-1
B.	Inhalation Pathway Dose Factor (R_i)	E2-1
C.	Ground Plane Pathway Dose Factor (R_i)	E3-1
D.	Grass-Cow-Milk Pathway Dose Factor (R_i)	E4-1
E.	Cow-Meat Pathway Dose Factor (R_i)	E5-1
F.	Vegetation Pathway Dose Factor (R_i)	E6-1
	APPENDIX A - F REFERENCES	E7-1

PART I

EFFLUENT DATA AND CALCULATIONAL METHODOLOGIES

1.0 LIQUID EFFLUENT MONITORS

1.1 TMI-1 and TMI-2 Liquid Radiation Monitor Set Points

The liquid effluent off-line monitors are set such that the concentration(s) of radionuclides in the liquid effluents will not exceed ten times the concentrations specified in 10 CFR 20, Appendix B Table 2, Col 2. Table 1.1 lists the Liquid Effluent Release Points and their parameters; Figure 1.1 provides a Liquid Release Pathway Diagram.

To meet the above limit, the alarm/trip set points for liquid effluent monitors and flow measuring devices are set in accordance with the following equation:

$$\frac{c * f}{F + f} \leq C \qquad \text{(eq 1.1)}$$

where:

C = ten times the effluent concentration of 10 CFR 20 for the site, in μCi/ml.

c = the set point, in μCi/ml, of the liquid effluent monitor measuring the radioactivity concentration in the effluent line prior to dilution and release. The set point is inversely proportional to the maximum volumetric flow of the effluent line and proportional to the minimal volumetric flow of the dilution stream plus the effluent stream. The alert set point value is set to ensure that advance warning occurs prior to exceeding any limits. The high alarm set point value is such that if it were exceeded, it would result in concentrations exceeding ten times the 10 CFR 20 concentrations for the unrestricted area.

f = flow set point as measured at the radiation monitor location, in volume per unit time, but in the same units as F below. Discharge flow ranges and flow recorder designations are listed in Table 1.1.

F = flow rate of dilution water measured prior to the release point, in volume per unit time. On site dilution minimal flows are listed in Table 1.1.

The set point concentration is reduced such that concentration contributions from multiple release points would not combine to exceed ten times 10 CFR 20 concentrations. The set point concentration is converted to set point scale units using appropriate radiation monitor calibration factors.

This section of the ODCM is implemented by the Radiation Monitor System Set Points procedure and, for batch releases, the Releasing Radioactive Liquid Waste procedure.

1.2 TMI Liquid Effluent Release Points and Liquid Radiation Monitor Data

TMI-1 has two required liquid radiation monitors. These are RM-L6 and RM-L12. These liquid release point radiation monitors and sample points are shown in Table 1.1. (The TMI outfall radiation monitor, RM-L7, is also listed for information only.)

TMI-2 does not have any required liquid radiation monitors, but does utilize RM-L12, and RM-L7 for release of non-accident water. TMI-2 does not release any processed water to the environment.

1.2.1 RM-L6

RM-L6 is an off-line system, monitoring radioactive batch discharges from the TMI-1 liquid radwaste system (see Figure 1.1). These batch releases are sampled and analyzed per site procedures prior to release. The release rate is based on releasing one of two Waste Evaporator Condensate Storage Tanks (WECST) at a flow which will add less than 10%, of ten times the 10 CFR 20 concentrations to radionuclide concentrations in the unrestricted area, including conservative default values for Sr-89, Sr-90, and Fe-55.

The release flow rate used is the most restrictive of three flow rates calculated for each liquid batch release, per the approved plant procedure.

Three Dilution Factors (DF) are calculated to ultimately calculate the batch release flow rate. These three DF's are calculated to: 1) insure each radionuclide released to the unrestricted area is less than 10 percent of ten times the 10CFR20 radionuclide concentrations, 2) ensure each liquid batch release boron concentration to the river will not exceed 0.7 ppm, and 3), ensure ten times the 10CFR20 concentration for Cesium-137 (1E-5 μCi/ml) will not be exceeded based on the calculated high alarm set point and the expected response of RM-L6 to this concentration of Cs-137.

The maximum release flow rate is then calculated by dividing the most restrictive (largest) DF into 90 percent of the current dilution flow rate of the Mechanical Draft Cooling Tower (MDCT). This conservative flow rate is then multiplied by 0.9 for the allowable flow rate.

- **Calculation of 10 percent 10% of ten times the 10CFR20 concentration DF:**

  $DF_1 = \Sigma_i (SA_i) \div$ (10% of ten times the 10CFR20 concentration)

  SA = Specific Activity of each identified radionuclide

- **Calculation of Boron DF:**

  DF_2 = Actual Tank Boron Concentration ÷ 0.7.

- **Calculation of Cs-137 Limit:**

  DF_3 = High Alarm Set Point ÷ (1E-5 μCi/ml * 7.16E7 cpm per μCi/ml)

- **Maximum release flow rate calculation:**

  Max Flow = [(MDCT flow gpm * 0.9) ÷ (Most Restrictive DF)] * 0.9

The dilution flow rate used is the current flow rate at the site. The minimum dilution flow rate is 5000 gpm per the TMI-1 FSAR. This ensures this batch release will meet the following equation.

$$\Sigma(C_i/X_i) \leq 0.10, \qquad \text{(eq 1.2)}$$

where: Ci = diluted concentration of the ith radionuclide.

X_i = Ten times the concentration for that radionuclide in the unrestricted area (10 CFR 20, App. B, Table 2, Col. 2). A value of 3E-3 μCi/ml for dissolved and entrained noble gases shall be used.

The set points for RM-L6 are set for each release based on the monitor response to each radionuclide identified in the gamma scan sample results as follows:

$$(1.5)^* [\Sigma i\ (\mu Ci/cc)_i{}^*(CPM/\mu Ci/cc)_i] + (CPM_{BKD}) = \text{ALERT CPM}$$

$$(2.0)^* [\Sigma i\ (\mu Ci/cc)_i\ (CPM/\mu Ci/cc)_i] + (CPM_{BKD}) = \text{HIGH ALARM CPM}$$

where: $(\mu Ci/cc)_i$ = positively identified radionuclides

$(CPM/\mu Ci/cc)_i$ = RM-L6 sensitivity to radionuclide i.

(CPM_{BKD}) = RM-L6 background prior to batch release

A high alarm on RM-L6 will close valve WDL-V-257 and terminate any WECST releases to the environment.

1.2.2 RM-L12

RM-L12 is an off-line system, monitoring periodic combined releases from the Industrial Waste Treatment System/Industrial Waste Filtration System (IWTS/IWFS). The input to IWTS/IWFS originates in TMI-2 sumps, (see Figures 1.1 and 1.2) and the TMI-1 Turbine Building sump (see Figure 1.1). The set points are based on the maximum release rate from both IWTS and IWFS simultaneously, (see Figure 1.1) a minimum dilution flow rate, and 50% of ten times the 10CFR20 concentration for Cs-137, which is the most limiting radionuclide at a concentration of 1E-5 μCi/ml. These inputs are used in equation 1.1 to determine the RM-L12 High Alarm set point for all radionuclides being released. The minimum dilution flow rate required per plant procedures during an IWTS/FS release is 10,000 gpm. A high alarm on RM-L12 will close IWTS and IWFS release valves and trip release pumps to stop the release.

1.2.3 RM-L10

RM-L10 was a NaI detector submerged in the TMI-1 Turbine Building Sump. This detector has been removed from service.

1.2.4 RM-L7

RM-L7 is not a Tech. Spec. required liquid radiation monitor. RM-L7 is an off-line system, monitoring the TMINS outfall to the Susquehanna River (see Figures 1.1 and 1.2). RM-L7 has an associated proportional to flow compositor which is used to collect composite samples. This monitor is the final radiation monitor for TMI-1 and TMI-2 normal liquid effluent releases.

1.3 Control of Liquid Releases

TMI liquid effluent releases are controlled to less than ten times the 10CFR20 concentrations by limiting the percentage of this limit allowable from the two TMI liquid release points. RM-L6, and effluent sampling, limits batch releases to less than or equal to 10% for all radionuclides, and RM-L12, and effluent sampling, limits releases from TMI-1 and TMI-2 to less than or equal to 50% for Cs-137.

These radiation monitor set points also include built in meter error factors to further ensure that TMI liquid effluent releases are less than ten times the 10CFR20 concentrations to the environment.

The radioactivity content of each batch of radioactive liquid waste is determined prior to release by sampling and analysis in accordance with TMI-1 Tech. Spec. Table 4.22-1. The results of pre-release analyses are used with the calculational methods in Section 1.1, to assure that the concentration at the point of release is maintained within the TMI-1 Tech. Spec. Section 3.22.1.1.

Post-release analysis of samples composited from batch releases are performed in accordance with TMI-1 Tech. Spec. Table 4.22-1. The results of the previous post-release analysis shall be used with the calculational methods in the ODCM to assure that the concentrations at the point of release were maintained within the TMI-1 Tech. Spec. Section 3.22.1.1.

The radioactivity concentration of liquids discharged from continuous release points are determined by collection and analysis of samples in accordance with TMI-1 Tech. Spec. Table 4.22-1. The results of the analysis are used with the calculational methods of the ODCM to assure that the concentration at the point of release is maintained within the TMI-1 Tech. Spec. Section 3.22.1.1.

TABLE 1.1

TMI Liquid Release Point and Liquid Radiation Monitor Data

LIQUID RADIATION MONITOR (DETECTOR)	LOCATION	LIQUID RELEASE POINT (Maximum Volume)	(f) DISCHARGE FLOW GPM (FLOW RECORDER)	(F) ON SITE DILUTION GPM	(FR) RIVER FLOW RATE GPM (Range)	(DF) NEAR FIELD DILUTION FACTOR	RADIATION MONITOR SENSITIVITY (CPM/μCi/cc)	RELEASE TERMINATION INTERLOCK (YES/NO) VALVES
RM-L6 (NaI)	281' Elevation TMI-1 Auxiliary Bldg	WECST Batch Releases (8000 gal.)	0-30 gpm (FT-84)	>=5,000 (FT-146) Minimum flow per FSAR	2E7 AVE. (1.4E6-5.4E8)	5	Cs-137 7.16E7	YES WDL-V257
RM-L7 (NaI) **	South end of TMI-1 MDCT	Station Discharge TMI-1 and TMI-2, Non-AGW	>=5,000 (FT-146)	N.A.	2E7 AVE. (1.4E6-5.4E8)	5	Cs-137 7.16E7	YES WDL-V257 *WDL-R-1311
RM-L12 (NaI)	IWFS Building NW Corner	IWTS/IWFS Continuous Releases (300,000/ 80,000 gal.)	0-200 gpm (FT-342)/ 0-100 gpm (FT-373)	>=10,000 (FT-146)	2E7 AVE. (1.4E6-5.4E8)	5	I-131 4E8 Cs-137 3E8	YES IW-V73, IW-P16,17,18 IW-V279, IW-P29,30

* WDL-R-1311 has been flanged off as a TMI-2 liquid outfall.
**RM-L7 is not a Tech. Spec. required liquid radiation monitor.

TABLE 1.2

TMI-2 Sump Capacities

Sump	Total Capacity Gallons	Gallons per Inch
Turbine Building Sump	1346	22.43
Circulating Water Pump House Sump	572	10.59
Control Building Area Sump	718	9.96
Tendon Access Galley Sump	538	9.96
Control to Service Building Sump	1346	22.43
Contaminated Drain Tank Room Sump	135	3.80
Chlorinator House Sump	----	----
Water Treatment Sump**	1615	22.43
Air Intake Tunnel Normal Sump	700	----
Air Intake Tunnel Emergency Sump	100000	766.00
Condensate Polisher Sump*	2617	62.31
Sludge Collection Sump**	1106	26.33
Heater Drain Sump	----	----
Solid Waste Staging Facility Sump	1476	24.00
Auxiliary Building Sump	10102	202.00
Decay Heat Vault Sump	479	10.00
Building Spray Vault Sump	479	10.00

* Condensate Polisher Sump is deactivated and in PDMS condition.
** The Water Treatment and Sludge Collection Sumps will be deactivated for PDMS.

Figure 1.1
TMI-1 Liquid Effluent Pathways

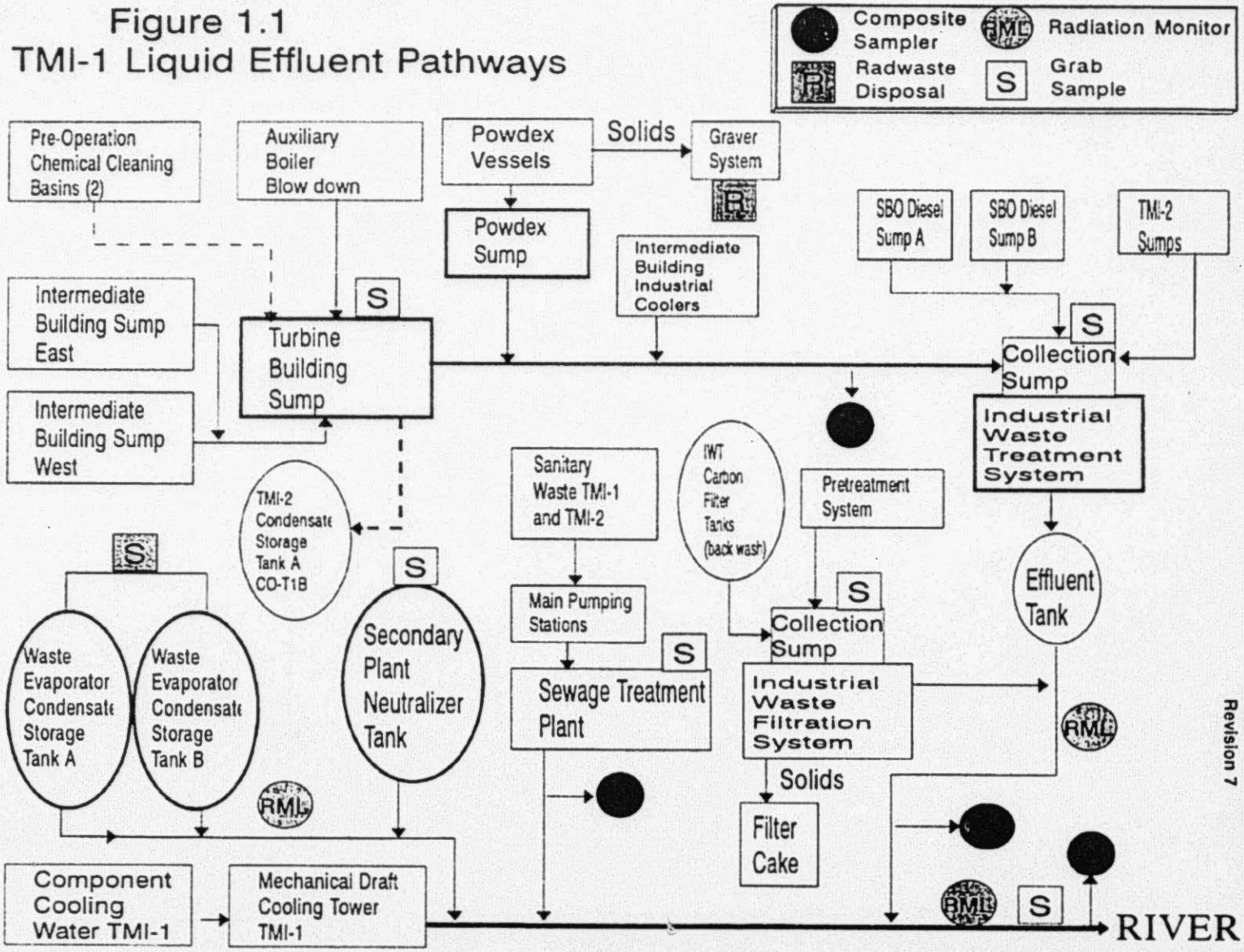

20.0

6610-PLN-4200.01
Revision 7

FIGURE 1.2

TMI-2 Liquid Effluent Pathways

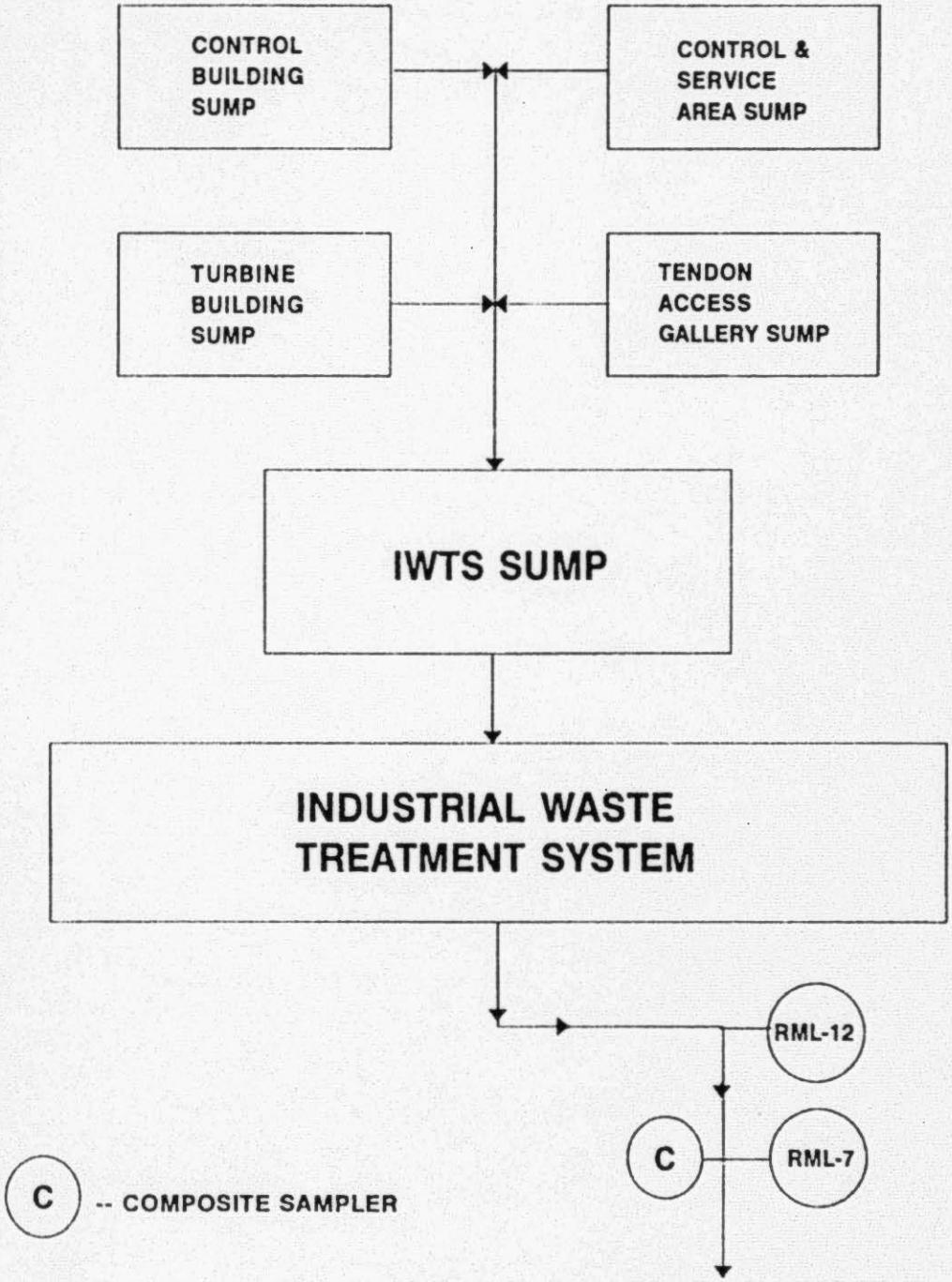

2.0 LIQUID EFFLUENT DOSE ASSESSMENT

2.1 Liquid Effluents - 10 CFR 50 Appendix I

The dose from liquid effluents results from the consumption of fish and drinking water. The location of the nearest potable water intake is PP&L Brunner Island Steam Electric Station located downstream of TMI. The use of the flow of the Susquehanna River as the dilution flow is justified based on the complete mixing in the river prior to the first potable water supply, adequately demonstrated by flume tracer die studies and additional liquid effluent release studies conducted using actual TMI-1 tritium releases. Other pathways contribute negligibly at Three Mile Island. The dose contribution from all radionuclides in liquid effluents released to the unrestricted area is calculated using the following expression:

$$Dose\ j = \sum_i \sum_j (\Delta t)\ X\ (C_i)\ X \left[\left(AW_{ij}\ X\ \frac{f}{FR} \right) + \left(AF_{ij}\ X\ \frac{f}{FD}\ X\ \frac{1}{DF} \right) \right] \quad \text{(eq 2.1)}$$

where:

Dose j = the cumulative dose commitment to the total body or any organ, j, from the liquid effluents for the total time period, in mrem.

Δt = the length of the time period of actual releases, over which C_i and f are averaged for all liquid releases, in hours.

C_i = the average concentration of radionuclide, i, in undiluted liquid effluent during time period Δt from any liquid release, in μCi/ml.

> **NOTE**
>
> For Fe-55, Sr-89, Sr-90, prior to batch releases conservative concentration values will be used in the initial dose calculation based on similar past plant conditions. LLD values are not used in dose calculations.

f = undiluted liquid waste flow, in gpm.

FD = plant dilution water flowrate during the period of release, in gpm

FR = actual river flowrate during the period of release or average river flowrate for the month the release is occurring, in gpm.

DF = dilution factor as a result of mixing effects in the near field of the discharge structure of 0.2 (Reg. Guide 1.109, Rev. 1, Table A-2) or taken to be 5 based on the inverse of 0.2.

AW_i and AF_i = the site-related ingestion dose commitment factor to the total body or any organ, j, for each identified principle gamma and beta emitter, in mrem/hr per μCi/ml. AW is the factor for the water pathway and AF is the factor for the fish pathway.

Values for AW_i are determined by the following equation:

$$AW_i = (1.14E5) \times (U_w) \times (DF_{ij}) \quad \text{(eq 2.2)}$$

where:

1.14E5 = (1.0E6 pCi/μCi) x (1.0E3 ml/kg) ÷ (8760 hr/yr)

U_w = Water consumption rate for adult is 730 kg/yr (Reg. Guide 1.109, Rev. 1).

DF_{ij} = ingestion dose conversion factor for radionuclide, i, for adults total body and for "worst case" organ, j, in mrem/pCi, from Table 2.1 (Reg. Guide 1.109)

Values for AF_i are determined by the following equation:

$$AF_i = (1.14E5) \times (U_f) \times (DF_{ij}) \times (BF_i) \quad \text{(eq 2.2.2)}$$

where:

1.14E5 = defined above

U_f = adult fish consumption, assumed to be 21 kg/yr (Reg. Guide 1.109, Rev. 1).

DF_{ij} = ingestion dose conversion factor for radionuclide, i, for adult total body and for "worst case" organ, j, in mrem/pCi, from Table 2.1 (Reg. Guide 1.109, Rev. 1).

BF_i = Bioaccumulation factor for radionuclide, i, in fish, in pCi/kg per pCi/L from Table 2.2 (Reg. Guide 1.109, Rev. 1).

2.2 TMI-1 Liquid Radwaste System Dose Calcs Once/Month

TMI-1 Tech. Spec. Section 3.22.1.3 requires that appropriate portions of the liquid radwaste treatment system shall be used to reduce the radioactive materials in liquid wastes prior to their discharge when the monthly projected doses due to the liquid effluent releases from each unit to unrestricted areas would exceed 0.06 mrem to the total body or 0.2 mrem to any organ in any calendar month. The following calculational method is provided for performing this dose projection.

At least once per month, the total dose from all liquid releases for the quarter-to-date will be divided by the number of days into the quarter and multiplied by 31. Also, this dose projection shall include the estimated dose due to any anticipated unusual releases during the period for which the projection is made. If this projected dose exceeds 0.06 mrem total body or 0.2 mrem any organ, appropriate portions of the Liquid Radwaste Treatment System, as defined in Section 3.1, shall be used to reduce radioactivity levels prior to release.

(This section does not apply to TMI-2.)

2.3 Alternative Liquid Dose Calculational Methodology

As an alternative, models in, or based upon, those presented in Regulatory Guide 1.109 (Rev. 1) may be used to make a comprehensive dose assessment. Default parameter values from Reg. Guide 1.109 (Rev. 1) and/or actual site specific data are used where applicable.

As an alternative dose calculational methodology GPU Nuclear calculates doses using SEEDS (simplified environmental effluent dosimetry system).

The onsite and SEEDS calculational models use actual liquid release data with actual monthly Susquehanna River flow data to assess the dispersion of effluents in the river.

TABLE 2.1

Liquid Dose Conversion Factors (DCF): DF_i

Page 1 of 3

Ingestion Dose Factors for Adults*
(MREM Per PCI Ingested)

NUCLIDE		BONE	LIVER	T. BODY	THYROID	KIDNEY	LUNG	GI-LLI
H	3	NO DATA	1.05E-07	1.05E-07	1.05E-07	1.05E-07	1.05E-07	1.05E-07
C	14	2.84E-06	5.68E-07	5.68E-07	5.68E-07	5.68E-07	5.68E-07	5.68E-07
NA	24	1.70E-06	1.70E-06	1.70E-06	1.70E-06	1.70E-06	1.70E-06	1.70E-06
CR	51	NO DATA	NO DATA	2.66E-09	1.59E-09	5.86E-10	3.53E-09	6.69E-07
MN	54	NO DATA	4.57E-06	8.72E-07	NO DATA	1.36E-06	NO DATA	1.40E-05
MN	56	NO DATA	1.15E-07	2.04E-08	NO DATA	1.46E-07	NO DATA	3.67E-06
FE	55	2.75E-06	1.90E-06	4.43E-07	NO DATA	NO DATA	1.06E-06	1.09E-06
FE	59	4.34E-06	1.02E-05	3.91E-06	NO DATA	NO DATA	2.85E-06	3.40E-05
CO	58	NO DATA	7.45E-07	1.67E-06	NO DATA	NO DATA	NO DATA	1.51E-05
CO	60	NO DATA	2.14E-06	4.72E-06	NO DATA	NO DATA	NO DATA	4.02E-05
NI	63	1.30E-04	9.01E-06	4.36E-06	NO DATA	NO DATA	NO DATA	1.88E-06
NI	65	5.28E-07	6.86E-08	3.13E-08	NO DATA	NO DATA	NO DATA	1.74E-06
CU	64	NO DATA	8.33E-08	3.91E-08	NO DATA	2.10E-07	NO DATA	7.10E-06
ZN	65	4.84E-06	1.54E-05	6.96E-06	NO DATA	1.03E-05	NO DATA	9.70E-06
ZN	69	1.03E-08	1.97E-08	1.37E-09	NO DATA	1.28E-08	NO DATA	2.96E-09
BR	83	NO DATA	NO DATA	4.02E-08	NO DATA	NO DATA	NO DATA	5.79E-08
BR	84	NO DATA	NO DATA	5.21E-08	NO DATA	NO DATA	NO DATA	4.09E-13
BR	85	NO DATA	NO DATA	2.14E-09	NO DATA	NO DATA	NO DATA	LT E-24
RB	86	NO DATA	2.11E-05	9.83E-06	NO DATA	NO DATA	NO DATA	4.16E-06
RB	88	NO DATA	6.05E-08	3.21E-08	NO DATA	NO DATA	NO DATA	8.36E-19
RB	89	NO DATA	4.01E-08	2.82E-08	NO DATA	NO DATA	NO DATA	2.33E-21
SR	89	3.08E-04	NO DATA	8.84E-06	NO DATA	NO DATA	NO DATA	4.94E-05
SR	90	7.58E-03	NO DATA	1.86E-03	NO DATA	NO DATA	NO DATA	2.19E-04
SR	91	5.67E-06	NO DATA	2.29E-07	NO DATA	NO DATA	NO DATA	2.70E-05
SR	92	2.15E-06	NO DATA	9.30E-08	NO DATA	NO DATA	NO DATA	4.26E-05
Y	90	9.62E-09	NO DATA	2.58E-10	NO DATA	NO DATA	NO DATA	1.02E-04

TABLE 2.1 (Cont'd)

Liquid Dose Conversion Factors (DCF): DF_i

Page 2 of 3

Ingestion Dose Factors for Adults*
(MREM Per PCI Ingested)

NUCLIDE		BONE	LIVER	T. BODY	THYROID	KIDNEY	LUNG	GI-LLI
Y	91M	9.09E-11	NO DATA	3.52E-12	NO DATA	NO DATA	NO DATA	2.67E-10
Y	91	1.41E-07	NO DATA	3.77E-09	NO DATA	NO DATA	NO DATA	7.76E-05
Y	92	8.45E-10	NO DATA	2.47E-11	NO DATA	NO DATA	NO DATA	1.48E-05
Y	93	2.68E-09	NO DATA	7.40E-11	NO DATA	NO DATA	NO DATA	8.50E-05
ZR	95	3.04E-08	9.75E-09	6.60E-09	NO DATA	1.53E-08	NO DATA	3.09E-05
ZR	97	1.68E-09	3.39E-10	1.55E-10	NO DATA	5.12E-10	NO DATA	1.05E-04
NB	95	6.22E-09	3.46E-09	1.86E-09	NO DATA	3.42E-09	NO DATA	2.10E-05
MO	99	NO DATA	4.31E-06	8.20E-07	NO DATA	9.76E-06	NO DATA	9.99E-06
TC	99M	2.47E-10	6.98E-10	8.89E-09	NO DATA	1.06E-08	3.42E-10	4.13E-07
TC	101	2.54E-10	3.66E-10	3.59E-09	NO DATA	6.59E-09	1.87E-10	1.10E-21
RU	103	1.85E-07	NO DATA	7.97E-08	NO DATA	7.06E-07	NO DATA	2.16E-05
RU	105	1.54E-08	NO DATA	6.08E-09	NO DATA	1.99E-07	NO DATA	9.42E-06
RU	106	2.75E-06	NO DATA	3.48E-07	NO DATA	5.31E-06	NO DATA	1.78E-04
AG	110M	1.60E-07	1.48E-07	8.79E-08	NO DATA	2.91E-07	NO DATA	6.04E-05
SB	125	1.79E-06	2.00E-08	4.26E-07	1.82E-09	0.0	1.38E-06	1.97E-05
TE	125M	2.68E-06	9.71E-07	3.59E-07	8.06E-07	1.09E-05	NO DATA	1.07E-05
TE	127M	6.77E-06	2.42E-06	8.25E-07	1.73E-06	2.75E-05	NO DATA	2.27E-05
TE	127	1.10E-07	3.95E-08	2.38E-08	8.15E-08	4.48E-07	NO DATA	8.68E-06
TE	129M	1.15E-05	4.29E-06	1.82E-06	3.95E-06	4.80E-05	NO DATA	5.79E-05
TE	129	3.14E-08	1.18E-08	7.65E-09	2.41E-08	1.32E-07	NO DATA	2.37E-08
TE	131M	1.73E-06	8.46E-07	7.05E-07	1.34E-06	8.57E-06	NO DATA	8.40E-05
TE	131	1.97E-08	8.23E-09	6.22E-09	1.62E-08	8.63E-08	NO DATA	2.79E-09
TE	132	2.52E-06	1.63E-06	1.53E-06	1.80E-06	1.57E-05	NO DATA	7.71E-05
I	130	7.56E-07	2.23E-06	8.80E-07	1.89E-04	3.48E-06	NO DATA	1.92E-06
I	131	4.16E-06	5.95E-06	3.41E-06	1.95E-03	1.02E-05	NO DATA	1.57E-06
I	132	2.03E-07	5.43E-07	1.90E-07	1.90E-05	8.65E-07	NO DATA	1.02E-07
I	133	1.42E-06	2.47E-06	7.53E-07	3.63E-04	4.31E-06	NO DATA	2.22E-06
I	134	1.06E-07	2.88E-07	1.03E-07	4.99E-06	4.58E-07	NO DATA	2.51E-10

TABLE 2.1 (Cont'd)

Liquid Dose Conversion Factors (DCF): DF_i

Page 3 of 3

Ingestion Dose Factors for Adults*
(MREM Per PCI Ingested)

NUCLIDE	BONE	LIVER	T. BODY	THYROID	KIDNEY	LUNG	GI-LLI
I 135	4.43E-07	1.16E-06	4.28E-07	7.65E-05	1.86E-06	NO DATA	1.31E-06
CS 134	6.22E-05	1.48E-04	1.21E-04	NO DATA	4.79E-05	1.59E-05	2.59E-06
CS 136	6.51E-06	2.57E-05	1.85E-05	NO DATA	1.43E-05	1.96E-06	2.92E-06
CS 137	7.97E-05	1.09E-04	7.14E-05	NO DATA	3.70E-05	1.23E-05	2.11E-06
CS 138	5.52E-08	1.09E-07	5.40E-08	NO DATA	8.01E-08	7.91E-09	4.65E-13
BA 139	9.70E-08	6.91E-11	2.84E-09	NO DATA	6.46E-11	3.92E-11	1.72E-07
BA 140	2.03E-05	2.55E-08	1.33E-06	NO DATA	8.67E-09	1.46E-08	4.18E-05
BA 141	4.71E-08	3.56E-11	1.59E-09	NO DATA	3.31E-11	2.02E-11	2.22E-17
BA 142	2.13E-08	2.19E-11	1.34E-09	NO DATA	1.85E-11	1.24E-11	3.00E-26
LA 140	2.50E-09	1.26E-09	3.33E-10	NO DATA	NO DATA	NO DATA	9.25E-05
LA 142	1.28E-10	5.82E-11	1.45E-11	NO DATA	NO DATA	NO DATA	4.25E-07
CE 141	9.36E-09	6.33E-09	7.18E-10	NO DATA	2.94E-09	NO DATA	2.42E-05
CE 143	1.65E-09	1.22E-06	1.35E-10	NO DATA	5.37E-10	NO DATA	4.56E-05
CE 144	4.88E-07	2.04E-07	2.62E-08	NO DATA	1.21E-07	NO DATA	1.65E-04
PR 143	9.20E-09	3.69E-09	4.56E-10	NO DATA	2.13E-09	NO DATA	4.03E-05
PR 144	3.01E-11	1.25E-11	1.53E-12	NO DATA	7.05E-12	NO DATA	4.33E-18
ND 147	6.29E-09	7.27E-09	4.35E-10	NO DATA	4.25E-09	NO DATA	3.49E-05
W 187	1.03E-07	8.61E-08	3.01E-08	NO DATA	NO DATA	NO DATA	2.82E-05
NP 239	1.19E-09	1.17E-10	6.45E-11	NO DATA	3.65E-10	NO DATA	2.40E-05

* Dose factors of internal exposure are for continuous intake over a one-year period and include the dose commitment over a 50-year period; from Reg. Guide 1.109 (Rev. 1). Additional dose factors for nuclides not included in this table may be obtained from NUREG-0172.

TABLE 2.2

Bioaccumulation Factors, BF_i

Bioaccumulation Factors to be Used in the Absence of Site-Specific Data*
(pCi/kg per pCi/liter)

ELEMENT	FRESHWATER	
	FISH	INVERTEBRATE
H	9.0E-01	9.0E-01
C	4.6E+03	9.1E+03
NA	1.0E+02	2.0E+02
CR	2.0E+02	2.0E+03
MN	4.0E+02	9.0E+04
FE	1.0E+02	3.2E+03
C0	5.0E+01	2.0E+02
NI	1.0E+02	1.0E+02
CU	5.0E+01	4.0E+02
ZN	2.0E+03	1.0E+04
BR	4.2E+02	3.3E+02
RB	2.0E+03	1.0E+03
SR	3.0E+01	1.0E+02
Y	2.5E+01	1.0E+03
ZR	3.3E+00	6.7E+00
NB	3.0E+04	1.0E+02
MO	1.0E+01	1.0E+01
TC	1.5E+01	5.0E+00
RU	1.0E+01	3.0E+02
RH	1.0E+01	3.0E+02
*SB	1.0E+00	1.0E+00
TE	4.0E+02	6.1E+03
I	1.5E+01	5.0E+00
CS	2.0E+03	1.0E+03
BA	4.0E+00	2.0E+02
LA	2.5E+01	1.0E+03
CE	1.0E+00	1.0E+03
PR	2.5E+01	1.0E+03
ND	2.5E+01	1.0E+03
W	1.2E+03	1.0E+01
NP	1.0E+01	4.0E+02

* Bioaccumulation factor values are taken from Reg. Guide 1.109 (Rev. 1), Table A-1j.

** Sb bioaccumulation factor value is taken from EPRI NP-3840.

3.0 TMI LIQUID EFFLUENT WASTE TREATMENT SYSTEMS

3.1 TMI-1 Liquid Effluent Waste Treatment System

3.1.1 Description of the Liquid Radioactive Waste Treatment System (see Figure 3.1)

Reactor Coolant Train

a. Water Sources - (3) Reactor Coolant Bleed Tanks (RCBT)
- (1) Reactor Coolant Drain Tank (RCDT)

b. Liquid Processing - Reactor Coolant Waste Evaporator (see Figure 3.2)
- Demineralizers prior to release

c. Liquid Effluent for Release - (2) Waste Evaporator Condensate Storage Tanks (WECST)

d. Dilution - Mechanical Draft Cooling Tower (0-38k gpm)
- River Flow (2E7 gpm average)

Miscellaneous Waste Train

a. Water sources:
- Auxiliary Building Sump
- Reactor Building Sump
- Miscellaneous Waste Storage Tank
- Laundry Waste Storage Tank
- Neutralizer Mixing Tank
- Neutralizer Feed Tank
- Used Precoat Tank
- Borated Water Tank Tunnel Sump
- Heat Exchanger Vault Sump
- Tendon Access Galley Sump
- Spent Fuel Pool Room Sump

b. Liquid Processing - Miscellaneous Waste Evaporator, MWE (see Figure 3.2)
- Demineralizers prior to release

c. Liquid Effluent for Release - (2) Waste Evaporator Condensate Storage Tanks (WECST)

d. Dilution - Mechanical Draft Cooling Tower (0-38k gpm)
- River Flow (2E7 gpm average)

3.2 Operability of the TMI-1 Liquid Effluent Waste Treatment System

3.2.1 The TMI-1 Liquid Waste Treatment System as described in Section 11 of the TMI-1 Final Safety Analysis Report is considered to be operable when one of each of the following pieces of equipment is available to perform its intended function:

a) Miscellaneous Waste Evaporator (WDL-Z1B) or Reactor Coolant Evaporator (WDL-Z1A)

b) Waste Evaporator Condensate Demineralizer (WDL-K3 A or B)

c) Waste Evaporator Condensate Storage Tank (WDL-T 11 A or B)

d) Evaporator Condensate Pumps (WDL-P 14 A or B)

3.2.2 TMI-1 Representative Sampling Prior to Discharge

All liquid releases from the TMI-1 Liquid Waste Treatment System are made through the Waste Evaporator Condensate Storage Tanks. To provide thorough mixing and a representative sample, the contents of the tank are recirculated using one of the Waste Evaporator Condensate Transfer Pumps.

3.3 TMI-2 Liquid Effluent Waste Treatment System

3.3.1 Description of the TMI-2 Liquid Radioactive Waste Treatment System

The TMI-2 Liquid Radioactive Waste Treatment System has been out of service since the TMI-2 Accident in 1979. TMI-2, however, releases water from various sumps and tanks to the river (see Figures 1.1 and 1.2). This process is governed by plant procedures that encompass proper sampling, sample analysis, and radiation monitoring techniques.

FIGURE 3.1

TMI-1 Liquid Radwaste

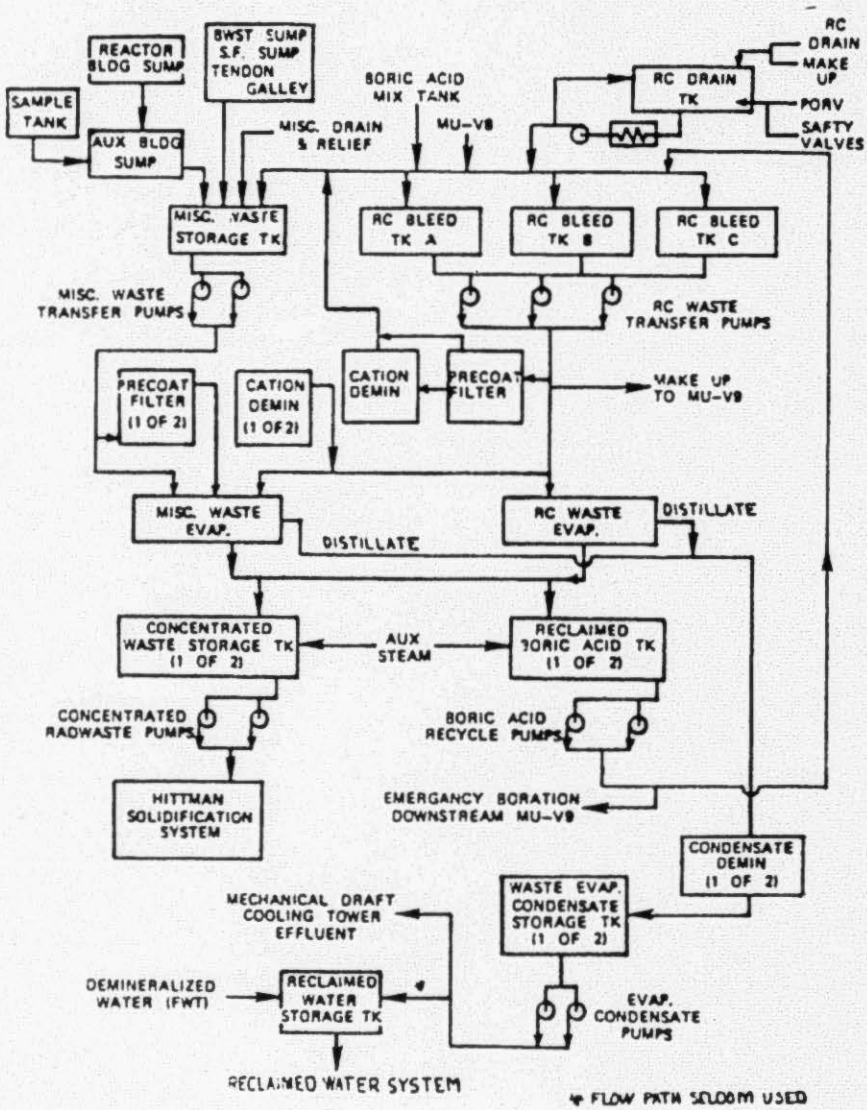

2171c

FIGURE 3.2

TMI-1 Liquid Waste Evaporators

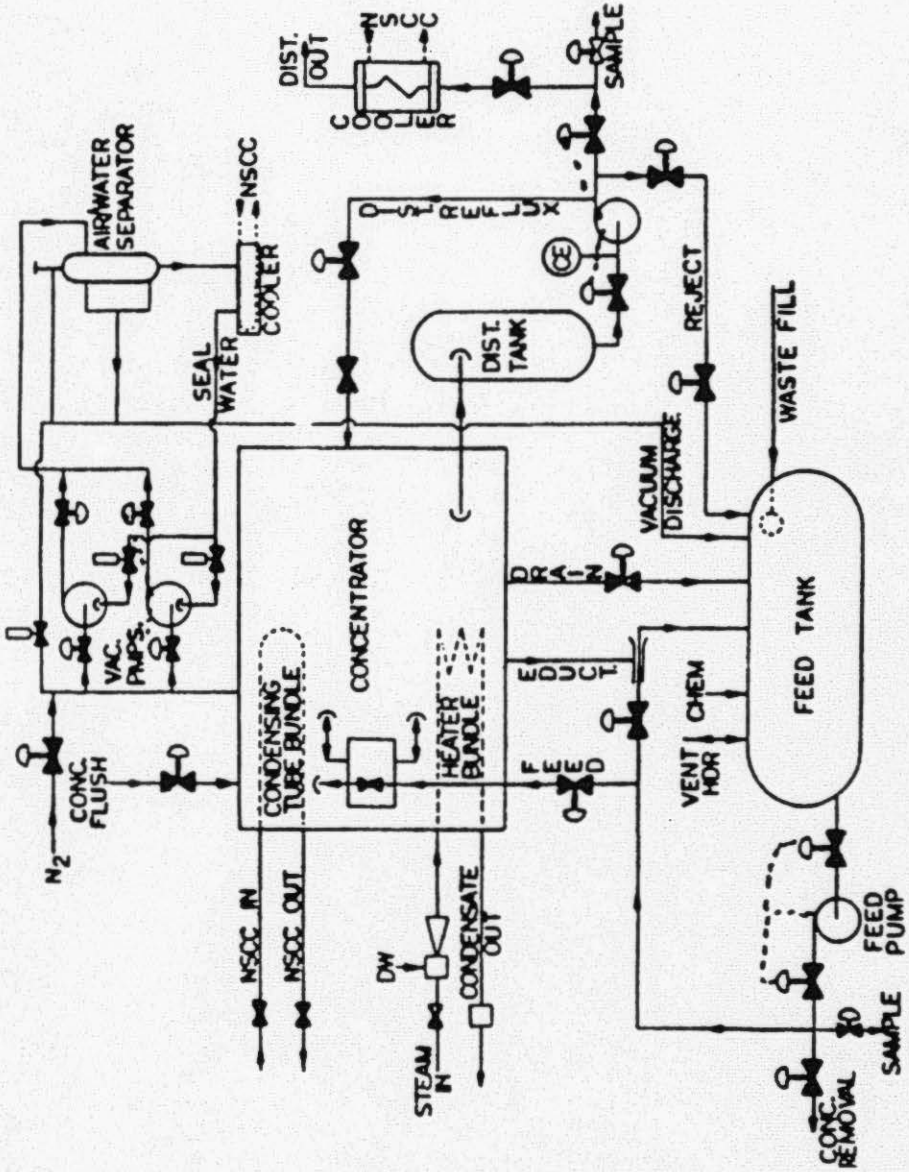

21714

4.0 GASEOUS EFFLUENT MONITORS

4.1 TMI-1 Noble Gas Monitor Set Points

The gaseous effluent monitor set points are established for each gaseous effluent radiation monitor to assure concentrations of radionuclides in gaseous effluents do not exceed the limits set forth in Technical Specification 3.22.2.1. Table 4.1 lists Gaseous Effluent Release Points and their associated parameters; Figure 4.1 provides a Gaseous Effluent Release Pathway Diagram.

The set points are established to satisfy the more restrictive set point concentration in the following two equations:

$$500 > \sum_i (c_i)(F)(K_i)(Dv) \qquad \text{(eq 4.1.1)}$$

and

$$3000 > \sum_i (c_i)(L_i + 1.1\, M_i)(Dv)(F) \qquad \text{(eq 4.1.2)}$$

where:

c_i = set point concentration based on Xe-133 equivalent, in μCi/cc

F = gaseous effluent flowrate at the monitor, in cc/sec (reference Table 4.1)

K_i = total body dose factor, in mrem/yr per μCi/m^3 from Table 4.3

Dv = highest sector annual average gaseous atmospheric dispersion factor (X/Q) at or beyond the unrestricted area boundary, in sec/m^3, from Table 4.4 for station vent releases and Table 4.5 for all other releases. (Condenser off gas, ESF FHB, and ground releases). Maximum values presently used are 7.17E-7 sec/m^3 at sector NNE for station vent, and 1.16E-5 sec/m^3 at sectors N and WNW for all other releases.

L_i = skin dose factor due to beta emissions from radionuclide i, in mrem/yr per μCi/m^3 from Table 4.3.

M_i = air dose factor due to gamma emissions from radionuclide i, in mrad/yr per μCi/m^3 from Table 4.3.

1.1 = mrem skin dose per mrad air dose.

500 = annual whole body dose rate limit for unrestricted areas, in mrem/yr.

3000 = annual skin dose rate limit for unrestricted areas, in mrem/yr.

The set point concentration is further reduced such that the concentration contributions from multiple release points would not combine to exceed Tech. Spec. limits.
The set point concentration is converted to set point scale units on each radiation monitor using appropriate calibration factors.

This section of the ODCM is implemented by the Radiation Monitor System Set Points procedure and the procedure for Releasing Radioactive Gaseous Waste.

4.2 TMI-1 Particulate and Radioiodine Monitor Set Points

Set points for monitors which detect radionuclides other than noble gases are also established to assure that concentrations of these radionuclides in gaseous effluents do not exceed the limits T.S. 3.22.2.1.

Set points are established so as to satisfy the following equations:

$$1500 > \sum_i (c_i)(F)(P_i)(Dv) \qquad \text{(eq 4.2)}$$

where:

c_i = set point concentration based on I-131 equivalent, in μCi/cc

F = gaseous effluent flow rate at the monitor, in cc/sec (Table 4.1)

P_i = pathway dose parameter, in mrem/yr per $\mu Ci/m^3$ for the inhalation pathway from Table 4.6. The dose factors are based on the actual individual organ and most restrictive age group (child) (NUREG-0133).

NOTE
Appendix A contains P_i calculational methodology.

1500 = annual dose rate limit to any organ from particulates and radioiodines and radionuclides (other than noble gases) with half lives greater than eight days in mrem/yr.

Dv = highest sector annual average gaseous dispersion factor (X/Q or D/Q) at or beyond the unrestricted area boundary from Table 4.4 for releases from the station vent and Table 4.5 for all other releases. X/Q is used for the inhalation pathway. Maximum values of X/Q presently used are 7.17E-7 sec/m^3 for station vent, at sector SE, and 1.16E-5 sec/m^3 for all other releases, at sectors N and WNW.

The set point concentration is further reduced such that concentration contributions from multiple release points would not combine to exceed Tech. Spec. limits.

The set point concentration is converted to set point scale units on each radiation monitor using appropriate calibration factors.

This section of the ODCM is implemented by the Radiation Monitor Systems Set Points procedure and the procedure for Releasing Radioactive Gaseous Waste.

4.3 TMI-2 Gaseous Radiation Monitor Set Points

TMI-2 Gaseous Radiation Monitors have their set points described in TMI Plant Procedure 1101-2.1. Figure 4.5 provides a gaseous effluent release pathway diagram. Table 4.2 provides TMI-2 Radiation Monitor Data.

These set points are set in accordance with the Controls delineated in Part II of this ODCM.

4.4 TMI-1 Gaseous Effluent Release Points and Gaseous Radiation Monitor Data

TMI-1 has eleven (11) required effluent gaseous radiation monitors. These are RM-A4, RM-A5, RM-A15, RM-A6, RM-A7, RM-A8, RM-A9, RM-A14, ALC-RMI-18, WHP-RIT-1, and RLM-RM-1. These gaseous release points, radiation monitors, and sample points are shown in Table 4.1.

4.4.1 RM-A4/RM-A6 Fuel Handling and Auxiliary Building Exhaust

RM-A4 is the particulate, radioiodine and gaseous radiation monitor for the TMI-1 Fuel Handling Building Ventilation (see Figures 4.1 and 4.2). RM-A6 is the particulate, radioiodine, and gaseous radiation monitor for the TMI-1 Auxiliary Building Ventilation (see Figures 4.1 and 4.2). High alarms on RM-A4 or RM-A6 noble gas channels will initiate shutdown of the related building ventilation air supply system. These two radiation monitors concurrently will satisfy requirements for the Station Vent release point in place of RM-A8.

4.4.2 RM-A8 Station Ventilation Exhaust

RM-A8 is the particulate, radioiodine and gaseous radiation monitor for the TMI-1 Station Ventilation (see Figures 4.1 and 4.2). This in plant effluent radiation monitor also has an associated sampling panel with sampling lines located before the sample filters. High alarm on RM-A8 noble gas low channel will initiate shutdown of the Station Ventilation air supply systems. (The Fuel Handling and Auxiliary Building Ventilation). This radiation monitor satisfies requirements for the Station Vent release point in place of RM-A4 and RM-A6.

4.4.3 RM-A5/RM-A15 Condenser Off Gas Exhaust

RM-A5 is the gaseous radiation monitor for the TMI-1 Condenser Off Gas exhaust (see Figures 4.1 and 4.4). RM-A15 is the back up gaseous radiation monitor for the TMI-1 Condenser Off Gas exhaust (see Figures 4.1 and 4.4). High alarms on RM-A5 low channel or RM-A15 noble gas channels will initiate the MAP-5 Radioiodine Processor Station. These two radiation monitors together satisfy requirements for the Condenser Off Gas release point.

4.4.4 RM-A7 Waste Gas Decay Tank Exhaust

RM-A7 is the gaseous radiation monitor for the TMI-1 Waste Gas Decay tanks (see Figures 4.1 and 4.2). This in plant effluent radiation monitor also has an associated sampling panel. High alarm on RM-A7 noble gas channel will initiate shutdown of the Waste Gas Decay Tank release in progress. This radiation monitor satisfies requirements for batch gaseous releases to the Station Vent release point.

4.4.5 RM-A9 Reactor Building Purge Exhaust

RM-A9 is the particulate, radioiodine and gaseous radiation monitor for the TMI-1 Reactor Building Purge system (see Figures 4.1 and 4.3). This in plant effluent radiation monitor also has an associated sampling panel with sampling lines located before the sample filters. High alarm on RM-A9 noble gas low channel will initiate shutdown of the Reactor Building Purge System. This radiation monitor satisfies requirements for the Reactor Building Purge System release point.

4.4.6 RM-A14 ESF FHB Ventilation System

RM-A14 is the gaseous radiation monitor for the TMI-1 Emergency Safeguards Features (ESF) Fuel Handling Building Exhaust system (see Figures 4.1 and 4.2). This in plant effluent radiation monitor also has an associated sampling panel with sampling lines located before the sampler filters. High alarm on RM-A14 noble gas channel will initiate shutdown of the ESF Fuel Handling Building Exhaust System. This radiation monitor satisfies requirements for the ESF Fuel Handling Building Exhaust System release point.

4.4.7 ALC-RMI-18 Chemical Cleaning Facility (CCF) Ventilation Exhaust

ALC-RMI-18 is an Eberline PING particulate, radioiodine, and gaseous radiation monitor for the Chemical Cleaning building exhaust. Presently, the radioiodine channel is not in use. This monitor is located in the Chemical Cleaning building on the ground floor, and has an associated sample panel. Sampling for particulate activity is performed off of the monitor.

4.4.8 WHP-RIT-1 Waste Handling and Packaging Facility (WHPF) Exhaust

WHP-RIT-1 is an Eberline AMS-3 particulate radiation monitor for the TMI WHPF. The monitor is located in the Mechanical Equipment Room in the WHPF. Sampling for particulate activity is performed off of the monitor. A high alarm will initiate shutdown of the ventilation air exhaust system.

4.4.9 RLM-RM-1 Respirator Cleaning and Laundry Maintenance (RLM) Facility

RLM-RM-1 is an Eberline AMS-3 particulate radiation monitor for the TMI RLM Facility. The monitor is located in the Mechanical Equipment Room in the RLM. Sampling for particulate activity is performed off of the monitor.

4.5 TMI-2 Gaseous Effluent Release Points and Gaseous Radiation Monitor Data

TMI-2 has three (3) regulatory required gaseous effluent radiation monitors. These are HP-R-219, HP-R-219A and HP-R-225. These gaseous release points, radiation monitors, and sample points are shown in Table 4.2, and various gaseous effluent pathways are depicted in Figure 4.5.

4.5.1 HP-R-219 Station Ventilation Exhaust

HP-R-219 is a Victoreen particulate and gaseous radiation monitor for the TMI-2 ventilation exhaust. This in-plant effluent radiation monitor is located in the TMI-2 Auxiliary Building 328 foot elevation and has an associated sample panel. A high alarm will initiate shutdown of the ventilation air supply systems.

4.5.2 HP-R-219A Station Ventilation Exhaust

HP-R-219A is a Victoreen particulate and gaseous radiation monitor for the TMI-2 ventilation exhaust. This in-plant effluent radiation monitor is located in the TMI-2 Auxiliary Building 328 foot elevation. A high alarm will initiate shutdown of the ventilation air supply systems.

4.5.3 HP-R-225 Reactor Building Purge Air Exhaust Duct "A"

HP-R-225 is a Victoreen particulate and gaseous radiation monitor for the TMI-2 Reactor Building Purge Air Exhaust System. This in-plant effluent radiation monitor is located in the TMI-2 Auxiliary Building 328' elevation area. A high alarm will initiate a shutdown of the TMI-2 Reactor Building Purge Exhaust System by tripping supply and exhaust dampers and actuating the recirculation mode.

4.6 Control of Gaseous Effluent Releases

TMI gaseous effluent combined releases are controlled (per TMI-1 Tech. Spec. Section 3.22.2.1 and ODCM Part II for TMI-2) by effluent sampling and radiation monitor set points. These measures assure that releases from the various vents do not combine to produce dose rates at the site boundary exceeding the most restrictive of 500 mrem per year to the total body or 3000 mrem per year to the skin, and 1500 mrem per year to the thyroid. This is done by restricting simultaneous releases and by limiting the dose rates that may be contributed by the various vents at any time. The various vent radiation monitor set points are each based on fractions of the above limits and do not exceed the above limits when summed together. These effluent radiation monitor set points are calculated using the methodology described in equations 4.1.1, or 4.1.2 and 4.2. The actual set points are then listed in TMI-1 Operations Procedure 1101-2.1.

The radioactive content of each batch of gaseous waste is determined prior to release by sampling and analyses in accordance with TMI-1 Tech. Spec. Table 4.22-2 and ODCM Part II for TMI-2. The results of pre-release analyses are used with the calculational methods in Sections 4.1 and 4.2 to assure that the dose rates at the site boundary are maintained below the limits in TMI-1 Tech. Spec. Section 3.22.2.1 and ODCM Part II for TMI-2.

Post-release analyses of samples composited from batch and continuous releases are performed in accordance with TMI-1 Tech. Spec. Table 4.22-2 and ODCM Part II for TMI-2. The results of the analyses are used to assure that the dose rates at the site boundary are maintained within the limits of TMI-1 Tech. Spec. Section 3.22.2.1 and ODCM Part II for TMI-2.

TABLE 4.1

TMI-1 Gaseous Release Point and Gaseous Radiation Monitor Data

GASEOUS RADIATION MONITOR (DETECTOR)	LOCATION	GASEOUS RELEASE POINT	(F) EXHAUST FLOW CFM (FLOW RECORDER)	RADIATION MONITOR SENSITIVITY (CPM/MIN/μCi/cc) PARTICULATE	RADIATION MONITOR SENSITIVITY (CPM/MIN/μCi/cc) IODINE	RADIATION MONITOR SENSITIVITY (CPM/μCi/cc) GAS	RELEASE TERMINATION INTERLOCK (YES/NO) VALVES
RM-A4	306' Elevation Auxiliary Bldg.	Fuel Hand. Building Exhaust	0-50,000 (FR-149)	1.30E10 (Sr-90)	1.22E9 (I-131)	3.96E7 (Xe-133)	YES AH-E-10 AH-D-120 AH-D-121 AH-D-122
RM-A6	306' Elevation Auxiliary Bldg.	Auxiliary Building Exhaust	0-100,000 (FR-150)	1.30E10 (Sr-90)	1.22E9 (I-131)	3.96E7 (Xe-133)	YES AH-E-11
RM-A8	RMA-8/9 Bldg. Near BWST Exhaust	Station Vent	0-150,000 (FR-151)	1.60E10 (Sr-90)	1.30E9 (I-131)	3.69E7 (Xe-133)	YES WDG-V47 AH-E-10 AH-E-11 Starts MAP-5 Radioiodine Sampler
RM-A5	322' Elevation Second Floor Turbine Bldg.	Condenser Off Gas Exhaust	0-200 FR-1113	----	----	4.00E7 (Xe-133) 8.70E7 (Kr-85)	YES Starts MAP-5 Radioiodine Sampler
RM-A15	322' Elevation Second Floor Turbine Bldg.	Condenser Off Gas Exhaust	0-200 FR-1113	----	----	3.25E7 (Xe-133) 9.11E7 (Kr-85)	YES Starts MAP-5 Radioiodine Sampler
RM-A7	306' Elevation Auxiliary Bldg.	Waste Gas Decay Tanks (A,B,C)	0-10 FR-123	----	----	4.00E5 (Xe-133)	YES WDG-V47
RM-A9	RMA-8/9 Bldg. Near BWST	Reactor Building Purge Exhaust	0-150,000 FR-909/ FR-148	1.80E10 (Sr-90)	1.40E9 (I-131)	3.96E7 (Xe-133)	YES AH-V-1A/B/C/D WDG-534/535 Starts MAP-5 Radioiodine Sampler
RM-A14	331' Elevation ESF FHB Outside Chem. Addition Bldg.	ESF Fuel Handling Building Exhaust	0-7000 FR-1104A/B	----	----	1.05E7 (Xe-133) 4.21E7 (Kr-85)	NO Manual Actions

TABLE 4.1 (Cont'd)

TMI-1 Gaseous Release Point and Gaseous Radiation Monitor Data

GASEOUS RADIATION MONITOR (DETECTOR)	LOCATION	GASEOUS RELEASE POINT	(F) EXHAUST FLOW CFM (FLOW RECORDER)	RADIATION MONITOR SENSITIVITY (CPM/MIN/μCi/cc) PARTICULATE	RADIATION MONITOR SENSITIVITY (CPM/MIN/μCi/cc) IODINE	RADIATION MONITOR SENSITIVITY (CPM/μCi/cc) GAS	RELEASE TERMINATION INTERLOCK (YES/NO) VALVES
ALC-RMI-18	Chemical Cleaning Bldg. 304' Elevation	CCB Exhaust System	8,000	1.40E5 CPM/μCi (SR-90)	—	2.06E7 (KR-85)	NONE
WHP-RIT-1	WHPF Mechanical Equipment Room	WHPF Exhaust System	7,500	3.333E10	—	—	YES WHPF Ventilation Trips
RLM-RM-1	RLM-Mechanical Equipment Room	RLM Exhaust System	900	3.33E10	—	—	NONE

TABLE 4.2

TMI-2 Gaseous Release Point and Gaseous Radiation Monitor Data

GASEOUS RADIATION MONITOR (DETECTOR)	LOCATION	GASEOUS RELEASE POINT	EXHAUST FLOW CFM	RADIATION MONITOR SENSITIVITY (CPM/MIN/μCi/cc) PARTICULATE BETA SCINTILLATOR	RADIATION MONITOR SENSITIVITY (CPM/MIN/μCi/cc) IODINE BETA SCINTILLATOR	RADIATION MONITOR SENSITIVITY (CPM/μCi/cc) GAS NaI DETECTOR	RELEASE TERMINATION INTERLOCK (YES/NO) VALVES
HP-R-219	328' Elevation Auxiliary Building	Station Vent Exhaust	140,000	1.514E11 (Sr 90)	---	7.81E7 (KR-85)	YES Trips AH-E-23A/B, 9A/B, 7A/B Closes D-5128A/D D-5129A Opens D5129D
HP-R-219A	328' Elevation Auxiliary Building	Station Vent Exhaust	140,000	1.514E11 (SR-90)	---	7.81E7 (KR-85)	YES Same as HP-H-219
HP-R-225	328' Elevation Auxiliary Building	Reactor Bldg Purge Exhaust Duct "A"	25,000	1.514E11 (SR-90)	---	7.81E7 (KR-85)	YES Closes D-5129A, 5128A/D. OPENS D-5129D

TABLE 4.3

Dose Factors for Noble Gases and Daughters*

Radio-nuclide	Gamma Total Body Dose Factor(a) K_i (mrem/yr per μCi/m^3)	Beta Skin Dose Factor(b) L_i (mrem/yr per μCi/m^3)	Gamma Air Dose Factor M_i (mrad/yr per μCi/m^3)	Beta Air Dose Factor N_i (mrad/yr per μCi/m^3)
Kr-83m	7.56E-02**	---	1.93E+01	2.88E+02
Kr-85m	1.17E+03	1.46E+03	1.23E+03	1.97E+03
Kr-85	1.61E+01	1.34E+03	1.72E+01	1.95E+03
Kr-87	5.92E+03	9.73E+03	6.17E+03	1.03E+04
Kr-88	1.47E+04	2.37E+03	1.52E+04	2.93E+03
Kr-89	1.66E+04	1.01E+04	1.73E+04	1.06E+04
Kr-90	1.56E+04	7.29E+03	1.63E+04	7.83E+03
Xe-131m	9.15E+01	4.76E+02	1.56E+02	1.11E+03
Xe-133m	2.51E+02	9.94E+02	3.27E+02	1.48E+03
Xe-133	2.94E+02	3.06E+02	3.53E+02	1.05E+03
Xe-135m	3.12E+03	7.11E+02	3.36E+03	7.39E+02
Xe-135	1.81E+03	1.86E+03	1.92E+03	2.46E+03
Xe-137	1.42E+03	1.22E+04	1.51E+03	1.27E+04
Xe-138	8.83E+03	4.13E+03	9.21E+03	4.75E+03
Ar-41	8.84E+03	2.69E+03	9.30E+03	3.28E+03

*Dose factors are for immersion exposure in uniform semi-infinite cloud of noble gas radionuclides that may be detected ingaseous effluents. Dose factor values are taken from Regulatory Guide 1.109 (Rev. 1), Table B-1.

**7.56E-02 = 7.56×10^{-2}.

(a) Total body dose factor for gamma penetration depth of 5 cm into the body.

(b) Skin dose factor at a tissue depth or tissue density thickness of 7 mg/cm^2.

TABLE 4.4

Atmospheric Dispersion Factors for Three Mile Island

- STATION VENT
- SECTOR AVERAGE X/Q (IN SEC/M^3)

DISTANCE (IN METERS)

SEASON - ANNUAL

SECTOR	610	2413	4022	5631	7240	12067	24135	40225	56315	72405
N	1.18E-07	5.32E-07	2.95E-07	1.93E-07	1.39E-07	5.52E-08	1.91E-08	5.02E-09	1.88E-09	1.09E-09
NNE	1.70E-07	7.17E-07	3.45E-07	2.00E-07	1.39E-07	5.58E-08	1.70E-08	4.77E-09	1.98E-09	9.69E-10
NE	1.12E-07	1.75E-07	3.26E-07	1.86E-07	1.21E-07	5.00E-08	1.67E-08	4.67E-09	1.85E-09	9.93E-10
ENE	1.09E-07	2.13E-07	2.67E-07	1.53E-07	1.05E-07	4.31E-08	1.42E-08	4.42E-09	1.59E-09	8.64E-10
E	2.31E-07	1.71E-07	1.52E-07	1.49E-07	1.06E-07	4.63E-08	1.52E-08	5.19E-09	2.48E-09	1.50E-09
ESE	3.50E-07	2.12E-07	2.50E-07	1.48E-07	9.48E-08	3.98E-08	1.50E-08	5.92E-09	2.92E-09	1.93E-09
SE	4.19E-07	3.79E-07	2.53E-07	1.55E-07	1.11E-07	4.82E-08	1.81E-08	6.84E-09	3.30E-09	2.22E-09
SSE	2.90E-07	3.62E-07	2.55E-07	1.49E-07	1.11E-07	5.02E-08	1.98E-08	6.97E-09	2.94E-09	1.70E-09
S	1.87E-07	6.47E-08	2.16E-07	1.30E-07	8.65E-08	4.09E-08	1.40E-08	4.96E-09	1.99E-09	1.04E-09
SSW	6.13E-08	4.16E-08	1.56E-07	1.03E-07	6.81E-08	2.72E-08	9.74E-09	3.01E-09	1.50E-09	8.23E-10
SW	5.76E-08	1.14E-07	1.70E-07	1.05E-07	6.93E-08	2.51E-08	9.34E-09	2.72E-09	1.33E-09	8.33E-10
WSW	8.52E-08	3.75E-07	2.14E-07	1.26E-07	7.74E-08	3.08E-08	1.02E-08	3.28E-09	1.39E-09	9.69E-10
W	1.15E-07	5.80E-07	2.88E-07	1.63E-07	1.18E-07	5.23E-08	1.72E-08	5.06E-09	1.98E-09	1.25E-09
WNW	1.41E-07	6.28E-07	3.30E-07	2.19E-07	1.48E-07	5.68E-08	1.95E-08	6.32E-09	2.16E-09	1.34E-09
NW	1.42E-07	5.67E-07	3.17E-07	1.93E-07	1.30E-07	5.67E-08	2.06E-08	5.90E-09	2.70E-09	1.45E-09
NNW	1.00E-07	5.77E-07	3.18E-07	1.80E-07	1.27E-07	5.20E-08	1.77E-08	4.82E-09	2.01E-09	1.22E-09

- STATION VENT
- SECTOR AVERAGE D/Q (IN M^{-2})

DISTANCE (IN METERS)

SEASON - ANNUAL

SECTOR	610	2413	4022	5631	7240	12067	24135	40225	56315	72405
N	2.51E-09	8.72E-10	4.84E-10	2.98E-10	2.50E-10	8.57E-11	2.51E-11	4.98E-12	1.57E-12	7.84E-13
NNE	3.89E-09	1.98E-09	9.54E-10	4.99E-10	3.38E-10	1.10E-10	2.89E-11	6.06E-12	2.10E-12	8.89E-13
NE	2.58E-09	6.70E-10	9.13E-10	4.91E-10	2.97E-10	1.04E-10	2.87E-11	6.01E-12	1.99E-12	9.23E-13
ENE	2.15E-09	5.85E-10	5.54E-10	3.06E-10	2.08E-10	8.30E-11	2.32E-11	5.41E-12	1.63E-12	7.64E-13
E	5.54E-09	1.23E-09	6.17E-10	4.59E-10	3.63E-10	1.34E-10	3.66E-11	9.44E-12	3.77E-12	1.97E-12
ESE	9.17E-09	2.05E-09	1.51E-09	8.66E-10	5.11E-10	1.82E-10	5.77E-11	1.72E-11	7.07E-12	4.07E-12
SE	1.22E-08	2.88E-09	1.84E-09	1.02E-09	6.85E-10	2.60E-10	8.30E-11	2.34E-11	9.42E-12	5.51E-12
SSE	7.50E-09	1.62E-09	1.08E-09	5.89E-10	4.49E-10	1.87E-10	6.16E-11	1.61E-11	5.67E-12	2.83E-12
S	3.86E-09	6.53E-10	6.27E-10	3.59E-10	2.32E-10	1.06E-10	3.05E-11	8.10E-12	2.73E-12	1.23E-12
SSW	1.13E-09	2.94E-10	4.19E-10	2.53E-10	1.56E-10	5.38E-11	1.68E-11	3.91E-12	1.64E-12	7.84E-13
SW	1.19E-09	3.84E-10	4.96E-10	2.80E-10	1.70E-10	5.24E-11	1.65E-11	3.62E-12	1.49E-12	8.12E-13
WSW	1.77E-09	8.31E-10	6.49E-10	3.50E-10	1.99E-10	6.73E-11	1.89E-11	4.58E-12	1.63E-12	9.90E-13
W	2.41E-09	1.29E-09	6.81E-10	3.65E-10	2.96E-10	1.12E-10	3.11E-11	6.90E-12	2.26E-12	1.25E-12
WNW	3.20E-09	1.39E-09	7.73E-10	5.91E-10	3.66E-10	1.19E-10	3.43E-11	8.36E-12	2.39E-12	1.29E-12
NW	3.25E-09	1.23E-09	7.39E-10	4.22E-10	2.77E-10	1.14E-10	7.28E-11	7.61E-12	2.92E-12	1.36E-12
NNW	1.98E-09	9.88E-10	5.71E-10	3.05E-10	2.23E-10	8.21E-11	2.41E-11	4.93E-12	1.72E-12	9.03E-13

DATA FROM 1/1/78 THROUGH 12/31/86 USED IN CALCULATIONS

TABLE 4.5

Atmospheric Dispersion Factors for Three Mile Island

• GROUND RELEASE
• SECTOR AVERAGE X/Q (IN SEC/M^3)

DISTANCE (IN METERS)

SEASON - ANNUAL

SECTOR	610	2413	4022	5631	7240	12067	24135	40225	56315	72405
N	1.16E-05	1.13E-06	5.94E-07	3.80E-07	2.38E-07	9.74E-08	3.45E-08	9.28E-09	3.52E-09	2.05E-09
NNE	1.08E-05	1.10E-06	5.66E-07	3.41E-07	2.38E-07	9.55E-08	3.11E-08	8.94E-09	3.74E-09	1.84E-09
NE	7.02E-06	9.81E-07	5.42E-07	3.17E-07	2.10E-07	9.01E-08	3.10E-08	8.87E-09	3.54E-09	1.91E-09
ENE	7.14E-06	9.64E-07	4.92E-07	2.85E-07	1.97E-07	7.82E-08	2.64E-08	8.38E-09	3.04E-09	1.66E-09
E	8.49E-06	1.09E-06	5.48E-07	2.91E-07	1.87E-07	8.40E-08	2.82E-08	9.85E-09	4.75E-09	2.87E-09
ESE	6.91E-06	9.02E-07	4.49E-07	2.57E-07	1.67E-07	7.20E-08	2.77E-08	1.12E-08	5.54E-09	3.68E-09
SE	6.70E-06	9.06E-07	4.53E-07	2.81E-07	2.03E-07	8.94E-08	3.33E-08	1.28E-08	6.19E-09	4.18E-09
SSE	7.26E-06	9.25E-07	4.91E-07	2.87E-07	2.08E-07	9.18E-08	3.72E-08	1.32E-08	5.62E-09	3.26E-09
S	8.70E-06	9.08E-07	3.99E-07	2.41E-07	1.61E-07	7.31E-08	2.57E-08	9.23E-09	3.74E-09	1.95E-09
SSW	6.05E-06	7.01E-07	2.75E-07	1.86E-07	1.24E-07	5.06E-08	1.82E-08	5.71E-09	2.87E-09	1.58E-09
SW	5.94E-06	5.71E-07	2.86E-07	1.81E-07	1.22E-07	4.50E-08	1.72E-08	5.12E-09	2.53E-09	1.59E-09
WSW	8.00E-06	7.02E-07	3.60E-07	2.15E-07	1.34E-07	5.50E-08	1.87E-08	6.12E-09	2.62E-09	1.83E-09
W	1.02E-05	1.07E-06	5.30E-07	3.02E-07	2.05E-07	9.31E-08	3.15E-08	9.48E-09	3.74E-09	2.38E-09
WNW	1.16E-05	1.13E-06	5.98E-07	3.67E-07	2.53E-07	1.00E-07	3.56E-08	1.18E-08	4.07E-09	2.54E-09
NW	1.13E-05	1.06E-06	5.70E-07	3.53E-07	2.40E-07	1.02E-07	3.82E-08	1.11E-08	5.14E-09	2.78E-09
NNW	1.08E-05	1.04E-06	5.72E-07	3.27E-07	2.22E-07	9.06E-08	3.20E-08	8.89E-09	3.75E-09	2.29E-09

•GROUND RELEASE
• SECTOR AVERAGE D/Q (IN M^{-2})

DISTANCE (IN METERS)

SEASON - ANNUAL

SECTOR	610	2413	4022	5631	7240	12067	24135	40225	56315	72405
N	2.30E-08	1.88E-09	8.93E-10	4.82E-10	2.70E-10	8.96E-11	2.53E-11	4.98E-12	1.57E-12	7.84E-13
NNE	2.66E-08	2.25E-09	1.06E-09	5.42E-10	3.38E-10	1.10E-10	2.89E-11	6.06E-12	2.10E-12	8.89E-13
NE	1.75E-08	2.00E-09	1.01E-09	5.04E-10	2.98E-10	1.04E-10	2.88E-11	6.01E-12	1.99E-12	9.23E-13
ENE	1.68E-08	1.85E-09	8.65E-10	4.28E-10	2.65E-10	8.57E-11	2.33E-11	5.41E-12	1.63E-12	7.64E-13
E	2.88E-08	2.99E-09	1.39E-09	6.34E-10	3.67E-10	1.35E-10	3.68E-11	9.42E-12	3.77E-12	1.97E-12
ESE	3.59E-08	3.80E-09	1.77E-09	8.79E-10	5.15E-10	1.83E-10	5.78E-11	1.71E-11	7.06E-12	4.06E-12
SE	4.12E-08	4.55E-09	2.13E-09	1.15E-09	7.50E-10	2.72E-10	8.31E-11	2.34E-11	9.42E-12	5.50E-12
SSE	3.12E-08	3.23E-09	1.59E-09	8.00E-10	5.20E-10	1.88E-10	6.18E-11	1.61E-11	5.66E-12	2.83E-12
S	2.65E-08	2.21E-09	9.07E-10	4.75E-10	2.86E-10	1.07E-10	3.06E-11	8.10E-12	2.73E-12	1.23E-12
SSW	1.45E-08	1.30E-09	4.80E-10	2.82E-10	1.70E-10	5.71E-11	1.69E-11	3.91E-12	1.64E-12	7.84E-13
SW	1.42E-08	1.10E-09	5.15E-10	2.82E-10	1.71E-10	5.24E-11	1.65E-11	3.62E-12	1.49E-12	8.12E-13
WSW	2.01E-08	1.41E-09	6.82E-10	3.54E-10	2.00E-10	6.76E-11	1.89E-11	4.58E-12	1.63E-12	9.90E-13
W	2.55E-08	2.16E-09	1.00E-09	4.91E-10	3.01E-10	1.12E-10	3.11E-11	6.90E-12	2.27E-12	1.25E-12
WNW	2.88E-08	2.30E-09	1.13E-09	5.93E-10	3.67E-10	1.19E-10	3.43E-11	8.36E-12	2.39E-12	1.29E-12
NW	2.78E-08	2.15E-09	1.06E-09	5.58E-10	3.41E-10	1.19E-10	3.57E-11	7.61E-12	2.92E-12	1.36E-12
NNW	2.17E-08	1.75E-09	8.75E-10	4.24E-10	2.57E-10	8.55E-11	2.42E-11	4.93E-12	1.72E-12	9.03E-13

DATA FROM 1/1/78 THROUGH 12/31/86 USED IN CALCULATIONS

TABLE 4.6

Dose Parameters for Radioiodines and Radioactive Particulate in Gaseous Effluents*

NUCLIDE	CRITICAL ORGAN	ORGAN FACTOR	Pi***	NUCLIDE	CRITICAL ORGAN	ORGAN FACTOR	Pi***
H-3**	TOTAL BODY	3.04E-07	1.12E+03	RU-103	LUNG	1.79E-04	6.62E+05
C-14	BONE	9.70E-06	3.59E+04	RU-105	GI-LLI	2.69E-05	9.95E+04
NA-24	TOTAL BODY	4.35E-06	1.61E+04	RU-106	LUNG	3.87E-03	1.43E+07
P-32	BONE	7.04E-04	2.60E+06	AG-110M	LUNG	1.48E-03	5.48E+06
CR-51	LUNG	4.59E-06	1.70E+04	TE-125M	LUNG	1.29E-04	4.77E+05
MN-54	LUNG	4.26E-04	1.58E+06	SB-125	LUNG	6.27E-04	2.32E+06
MN-56	GI-LLI	3.33E-05	1.23E+05	TE-127M	LUNG	4.00E-04	1.48E+06
FE-55	LUNG	3.00E-05	1.11E+05	TE-127	GI-LLI	1.52E-05	5.62E+04
FE-59	LUNG	3.43E-04	1.27E+06	TE-129M	LUNG	4.76E-04	1.76E+06
CO-58	LUNG	2.99E-04	1.11E+06	TE-129	GI-LLI	6.89E-06	2.55E+04
CO-60	LUNG	1.91E-03	7.07E+06	TE-131M	GI-LLI	8.32E-05	3.08E+05
NI-63	BONE	2.22E-04	8.21E+05	TE-131	LUNG	5.55E-07	2.05E+03
NI-65	GI-LLI	2.27E-05	8.40E+04	TE-132	LUNG	1.02E-04	3.77E+05
CU-64	GI-LLI	9.92E-06	3.67E+04	I-130	TYHROID	4.99E-04	1.85E+06
ZN-65	LUNG	2.69E-04	9.95E+05	I-131	THYROID	4.39E-03	1.62E+07
ZN-69	GI-LLI	2.75E-06	1.02E+04	I-132	THYROID	5.23E-05	1.94E+05
BR-83	TOTAL BODY	1.28E-07	4.74E+02	I-133	THYROID	1.04E-03	3.85E+06
BR-84	TOTAL BODY	1.48E-07	5.48E+02	I-134	THYROID	1.37E-05	5.07E+04
BR-85	TOTAL BODY	6.84E-09	2.53E+01	I-135	THYROID	2.14E-04	7.92E+05
RB-86	LIVER	5.36E-05	1.98E+05	CS-134	LIVER	2.74E-04	1.01E+06
RB-88	LIVER	1.52E-07	5.62E+02	CS-136	LIVER	4.62E-05	1.71E+05
RB-89	LIVER	9.33E-08	3.45E+02	CS-137	BONE	2.45E-04	9.07E+05
SR-89	LUNG	5.89E-04	2.16E+06	CS-138	LIVER	2.27E-07	8.40E+02
SR-90	BONE	2.73E-02	1.01E+08	BA-139	GI-LLI	1.56E-05	5.77E+04
SR-91	GI-LLI	4.70E-05	1.74E+05	BA-140	LUNG	4.71E-04	1.74E+06
SR-92	GI-LLI	6.55E-05	2.42E+05	BA-141	LUNG	7.89E-07	2.92E+03
Y-90	GI-LLI	7.24E-05	2.68E+05	BA-142	LUNG	4.44E-07	1.64E+03
Y-91M	LUNG	7.60E-07	2.81E+03	LA-140	GI-LLI	6.10E-05	2.26E+05
Y-91	LUNG	7.10E-04	2.63E+06	LA-142	GI-LLI	2.05E-05	7.59E+04
Y-92	GI-LLI	6.46E-05	2.39E+05	CE-141	LUNG	1.47E-04	5.44E+05
Y-93	GI-LLI	1.05E-04	3.89E+05	CE-143	GI-LLI	3.44E-05	1.27E+05
ZR-95	LUNG	6.03E-04	2.23E+06	CE-144	LUNG	3.23E-03	1.20E+07
ZR-97	GI-LLI	9.49E-05	3.51E+05	PR-143	LUNG	1.17E-04	4.33E+05
NB-95	LUNG	1.66E-04	6.14E+05	PR-144	LUNG	4.23E-07	1.57E+03
MO-99	LUNG	3.66E-05	1.35E+05	ND-147	LUNG	8.87E-05	3.28E+05
TC-99M	GI-LLI	1.30E-06	4.81E+03	W-187	GI-LLI	2.46E-05	9.10E+04
TC-101	LUNG	1.58E-07	5.85E+02	NP-239	GI-LLI	1.73E-05	6.40E+04

* The listed dose parameters are for radionuclides, other than noble gases that may be detected in gaseous effluents. Pi factors include all nonatmospheric pathway transport parameters, the receptor's usage of pathway media, and are based on the most restrictive age group (child) critical organ. Additional dose parameters for nuclides not included in this Table may be calculated using the methodology described in NUREG-0133.

** Tritium dose factors include an increase of 50% to account for the additional amount of this nuclide absorbed through the skin.

*** mrem/year per $\mu Ci/m^3$.

FIGURE 4.1

TMI-1 Gaseous Effluent Pathways

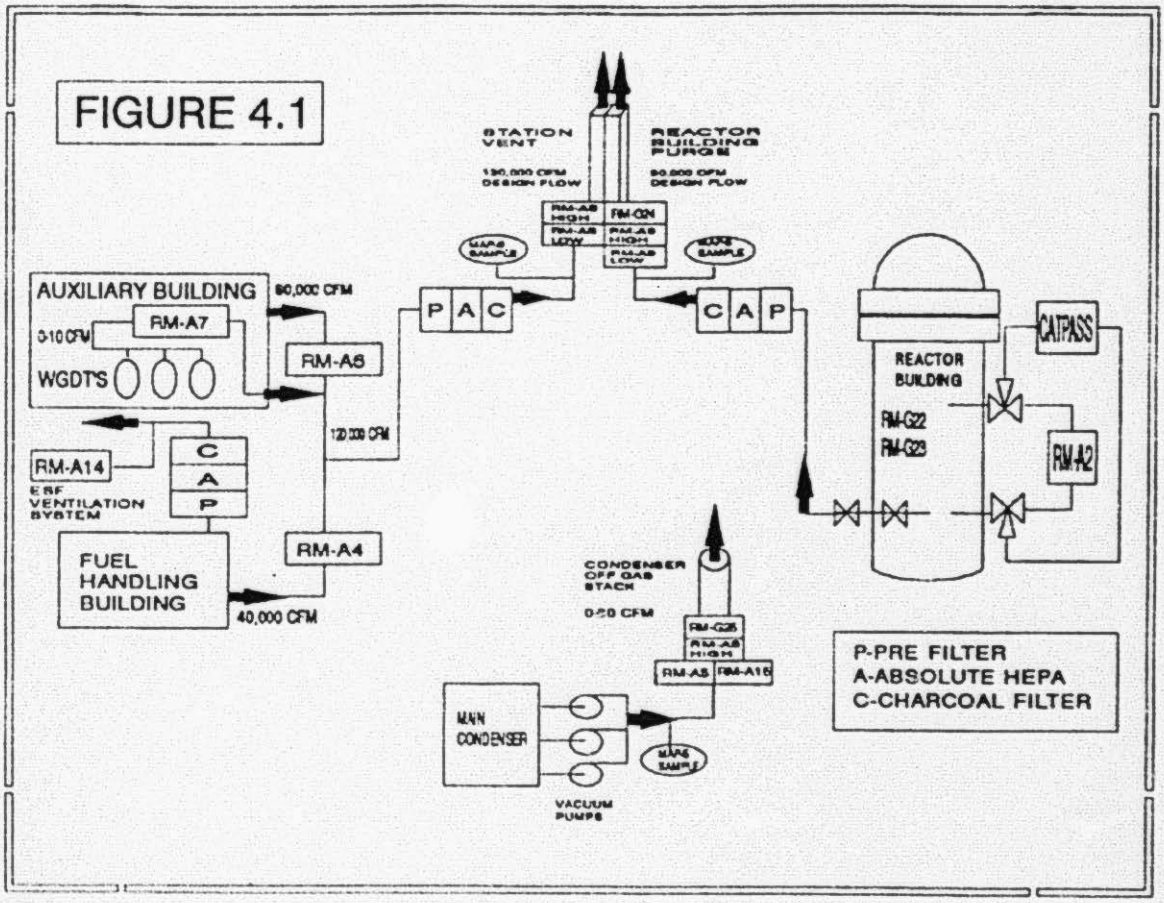

FIGURE 4.2

TMI-1 Auxiliary and Fuel Handling Buildings Effluent Pathways

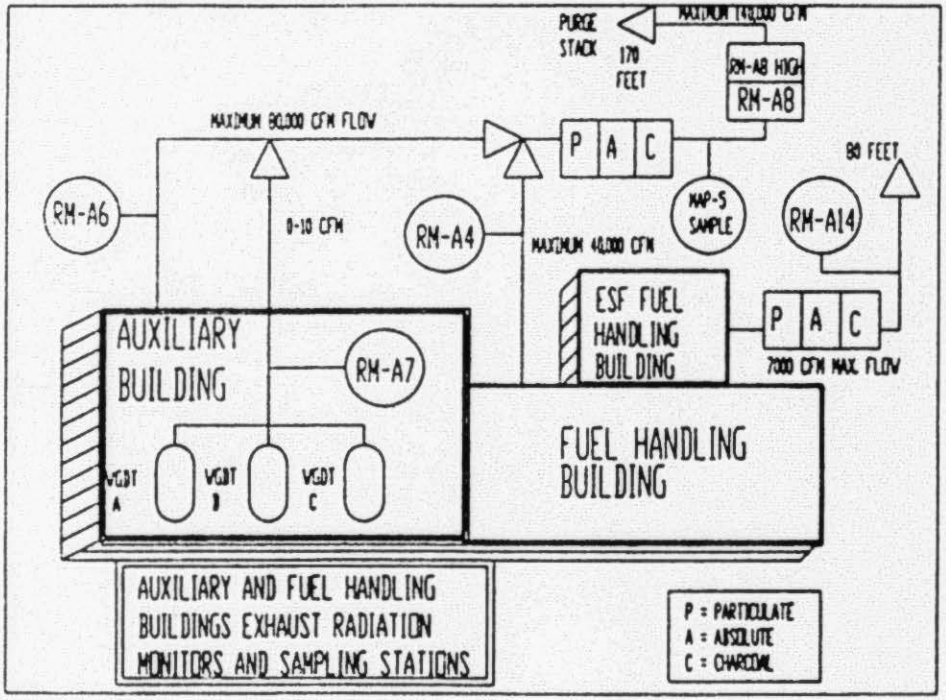

FIGURE 4.3

TMI-1 Reactor Building Effluent Pathway

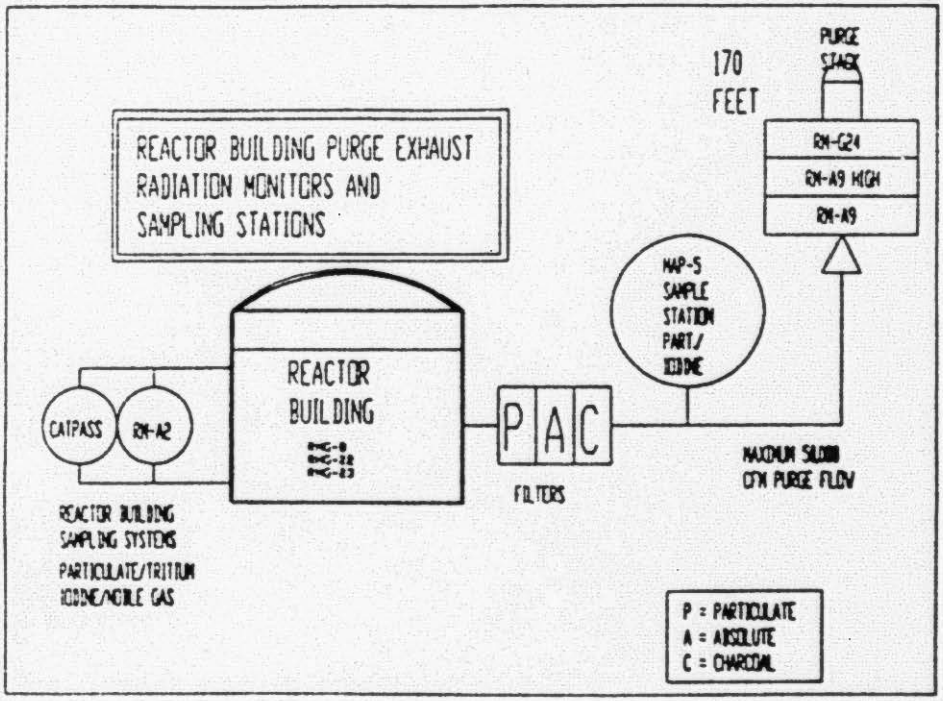

FIGURE 4.4

TMI-1 Condenser Offgas Effluent Pathway

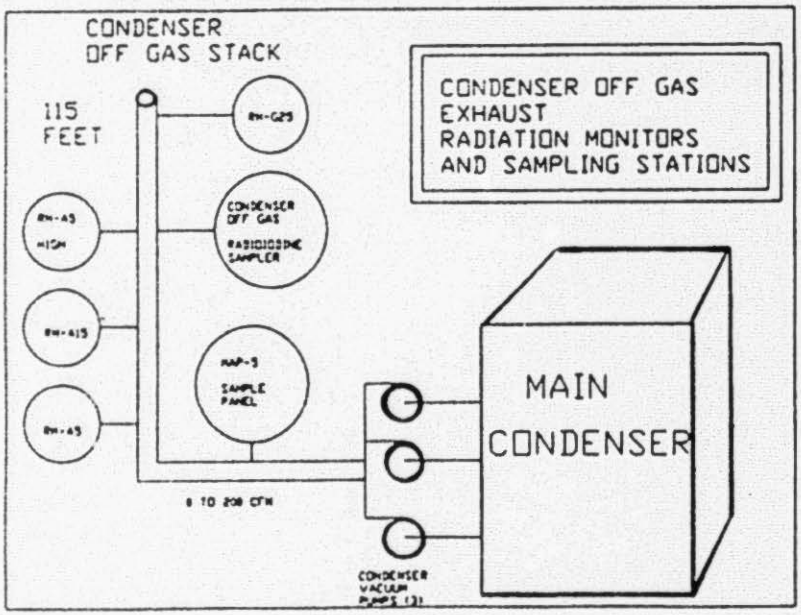

FIGURE 4.5

TMI-2 Gaseous Effluent Pathways

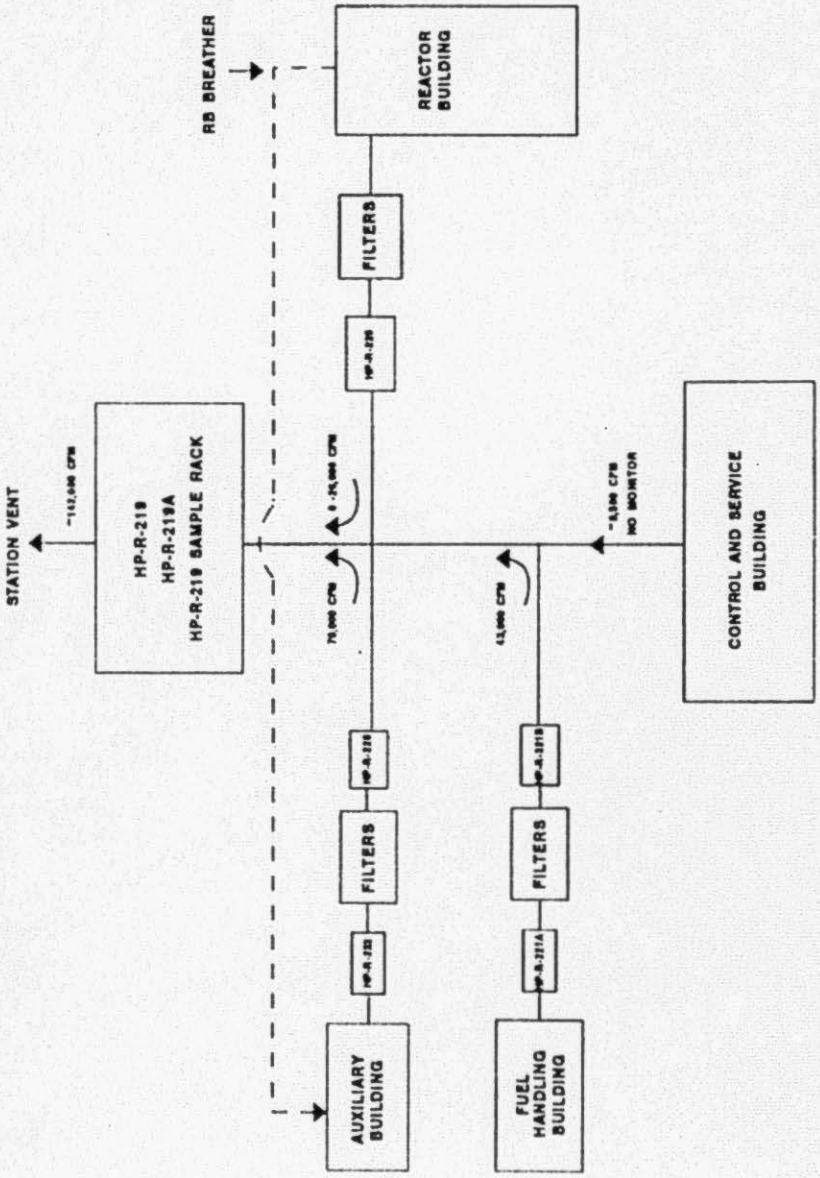

UNIT 2 EXHAUST AIR FLOW AND RMS SCHEMATIC

5.0 GASEOUS EFFLUENT DOSE ASSESSMENT

5.1 Gaseous Effluents - Instantaneous Release Limits

5.1.1 Noble Gases

For noble gases, the following equations apply for total body and skin dose rate at the unrestricted area boundary:

5.1.1.1 Total Body

$$\text{Dose Rate}_{tb} = \sum_i (K_i) \times (Dv) \times (Q_i) \qquad \text{(eq 5.1.1.1)}$$

where:

Dose Rate_{tb} = instantaneous total body dose rate limit, at the site boundary, in mrem/yr.

K_i = total body dose factor due to gamma emissions for each identified noble gas radionuclide, in mrem/yr per $\mu Ci/m^3$ from Table 4.3.

Dv = highest sector annual average gaseous dispersion factor (X/Q) at or beyond the unrestricted area boundary, in sec/m^3, from Table 4.4 for station vent releases; and Table 4.5 for all other releases (Condenser Off Gas, ESF FHB, and ground releases). Maximum values presently in use are 7.17E-7 sec/m^3 at sector NNE for station vent, and 1.16E-5 sec/m^3 for all other releases, at sectors N and WNW.

Q_i = Release rate of radionuclide, i, in $\mu Ci/sec$ as determined by sampling and analysis. Calculated using the concentration of noble gas radionuclide, i, in $\mu Ci/cc$, times the release pathway flow rate, in cc/second.

5.1.1.2 Skin

$$\text{Dose Rate}_{sk} = \sum_i (L_i + 1.1\, M_i) \times (Dv) \times (Q_i) \qquad \text{(eq 5.1.1.2)}$$

where:

Dose Rate_{sk} = instantaneous mrem/year skin dose rate limit, at the site boundary, in mrem/yr.

L_i = skin dose factor due to beta emissions for each identified noble gas radionuclide, in mrem/yr per $\mu Ci/m^3$ from Table 4.3.

M_i = air dose factor due to gamma emissions for each identified noble gas radionuclide, in mrad/yr per $\mu Ci/m^3$ from Table 4.3.

1.1 = mrem skin dose per mrad air dose. Converts air dose to skin dose.

Q_i = release rate of radionuclide, i, in $\mu Ci/sec$, as determined by sampling and analysis. Calculated using the concentration of noble gas radionuclide, i, in $\mu Ci/cc$, times the release pathway flow rate, in cc/second.

Dv = highest sector annual average gaseous dispersion factor (X/Q) at or beyond the unrestricted area boundary, in sec/m^3, from Table 4.4 for station vent releases; and Table 4.5 for all other releases (Condenser Off Gas, ESF FHB, and ground releases). Maximum values presently in use are 7.17E-7 sec/m^3 at sector NNE for station vent, and 1.16E-5 sec/m^3 for all other releases, at sectors N and WNW.

5.1.2 Iodine-131, Iodine-133, Tritium and Radionuclides in Particulate Form, with Half-Lives Greater than 8 Days

For I-131, I-133, Tritium and Radionuclides in Particulate Form, with half-lives greater than 8 days, the following equation applies:

$$\text{Dose Rate}_{p} = \sum_{i} (P_i)(Dv)(Q_i) \qquad \text{(eq 5.1.2)}$$

where:

Dose Rate$_p$ = mrem/year organ dose rate.

P_i = dose parameter for I-131, I-133, Tritium and Radionuclides in Particulate Form, with half-lives greater than 8 days, for the inhalation pathway, in mrem/yr per μCi/m^3, from Table 4.6. The dose factors are based on the critical individual organ and most restrictive age group (child).

Dv = highest sector annual average gaseous dispersion factor (X/Q or D/Q) at or beyond the unrestricted area boundary, in sec/m^3, from Table 4.4 for the station vent releases and Table 4.5 for all other releases. X/Q is used for the inhalation pathway. Maximum values of X/Q presently used are 7.17E-7 sec/m^3 for station vent, at sector NNE, and 1.16E-5 sec/m^3 for all other releases, at sectors N and WNW.

Q_i = release rate of each radionuclide, i, in μCi/sec. Calculated using the concentration of each radionuclide, i, in μCi/cc, times the release pathway flow rate, in cc/second.

5.2 Gaseous Effluents - 10 CFR 50 Appendix I

5.2.1 Noble Gases

The air dose in an unrestricted area due to noble gases released in gaseous effluents from the site is determined using the following expressions:

$$\text{Dose } \Gamma = (3.17E\text{-}8) \times \sum_i (M_i) \times (Dv) \times (Qi) \qquad \text{(eq 5.2.1)}$$

and

$$\text{Dose } \beta = (3.17E\text{-}8) \times \sum_i (N_i) \times (Dv) \times (Qi) \qquad \text{(eq 5.2.2)}$$

where:

Dose Γ = mrad gamma air dose due to gamma emissions from noble gas radionuclides.

Dose β = mrad beta air dose due to beta emissions from noble gas radionuclides.

M_i = air dose factor due to gamma emissions for each identified noble gas radionuclide, in mrad/yr per μCi/m^3, from Table 4.3.

N_i = air dose factor due to beta emissions for each identified noble gas radionuclide, in mrad/yr per μCi/m^3, from Table 4.3.

Dv = highest sector annual average gaseous dispersion factor, X/Q, at or beyond the unrestricted area boundary, in sec/m^3. Values may be read or interpolated from Table 4.4 for releases from the station vent and Table 4.5 for all other releases. Maximum values of X/Q presently used are 7.17E-7 sec/m^3 for station vent at sector NNE, and 1.16E-5 sec/m^3 for all other releases at sectors N or WNW.

Q_i = release of noble gas radionuclide, i, in μCi, over the specified time period, (μCi/second * seconds).

3.17E-8 = inverse of the number of seconds in a year.

NOTE

If the methodology in this section is used in determining dose to an individual, rather than air dose due to noble gases, substitute Ki, from Table 4.3, for Mi, and (Li + 1.1 Mi) for Ni.

5.2.2 Iodine-131, Iodine-133, Tritium and Radionuclides in Particulate Form with Half-Lives Greater than 8 Days

The dose to an individual from I-131, I-133, Tritium and Radionuclides in Particulate Form with half-lives greater than 8 days in gaseous effluents released from the site to an unrestricted area is determined by solving the following expression:

$$Dose_{a} = \sum_{i}(3.17E\text{-}8) \times \sum_{i} (R_i)\,(Dv)\,(Q_i) \qquad \text{(eq 5.2.2)}$$

where:

$Dose_{a}$ = dose to all real pathways, p, to organ, o, of an individual in age group, a, from I-131, I-133, Tritium and Radionuclides in Particulate Form, with half-lives greater than 8 days, in mrem, during any desired time period.

R_i = the dose factor for each identified radionuclide, i, pathway, p, age group, a, and organ, o, in mrem/yr per μCi/m^3 for the inhalation pathway and m^2 - mrem/yr per μCi/sec for other pathways, from Tables 5.2 to 5.7.

NOTE

Since there is minimal or no elemental iodine released from the condenser off-gas air ejector (see NUREG-0017) all Iodine R_i values for all pathways, except the inhalation pathway, are considered to be zero when performing dose calculations for releases from the condenser off-gas air ejector. Only calculate the dose due to the inhalation pathway for condenser off-gas air ejector iodines.

NOTE

Tritium, H-3, dose factor is mrem/year per μCi/m^3 for all pathways.

Dv = highest sector annual average gaseous dispersion factor (X/Q) at or beyond the unrestricted area boundary, in sec/m^3, for the inhalation pathway, and D/Q, in m^2, for other pathways. Table 4.4 is used for station vent releases and Table 4.5 for all other releases. Maximum values of X/Q presently used are 7.17E-7 sec/m^3 for station vent at sector NNE and 1.16E-5 sec/m^3 for all other releases at sectors N and WNW. Maximum values of D/Q in m^2 for station vent is 1.22E-8/m^2 at sector SE, and for ground releases, 4.12E-8/m^2 for sector SE.

Dv(H-3) = In the case of H-3 only the X/Q's are used for all pathways from Table 4.4 for station vent releases and Table 4.5 for all other releases.

Q_i = release of I-131, I-133, Tritium and Radionuclides, i, in Particulate Form with half-lives greater than 8 days, in μCi, cumulative over the specified time period (μCi/second * seconds).

3.17E-8 = inverse of the number of seconds in a year.

5.3 Gaseous Radioactive System Dose Calculations Once per Month

TMI-1 Tech. Spec. Section 3.22.2.4 requires that appropriate subsystem of the Gaseous Radwaste Treatment System shall be used to reduce the radioactive materials in gaseous waste prior to their discharge. When the monthly projected doses due to the gaseous effluent releases from the site would exceed:

0.2 mrad to air from gamma radiation; or
0.4 mrad to air from beta radiation; or
0.3 mrem to any organ.

The following calculational method is provided for performing this dose projection.

At least once per month the gamma air dose, beta air dose and the maximum organ dose for the quarter-to-date will be divided by the number of days into the quarter and multiplied by 31. Also, this dose projection shall include the estimated dose due to any anticipated unusual release during the period for which the projection is made. If these projected doses exceed any of the values listed above, appropriate portions of the Gaseous Waste Processing System, as defined in Section 6.2, shall be used to reduce radioactivity levels prior to release.

5.4 Alternative Dose Calculational Methodologies for Gaseous Effluents

As an alternative to the methods described above, the models in/or based upon, those presented in Regulatory Guide 1.109 (Rev. 1) may be used to make a comprehensive dose assessment. Default parameter values from Regulatory Guide 1.109 (Rev. 1) and/or actual site specific data can be used where applicable.

The onsite, on-line computerized system for tracking gaseous effluent dose uses annual average gaseous dispersion factors. As an alternative dose calculational methodology. GPU Nuclear calculates doses using an advanced class "A" dispersion model called SEEDS (simplified environmental effluent dosimetry system).

This model incorporates the guidelines and methodology set forth in USNRC Regulatory Guide 1.109, and uses actual hourly meteorological information matched to the time of releases to more accurately assess the dispersion of effluents in the atmosphere. Combining this assessment of dispersion with TMINS effluent data for each unit, postulated maximum hypothetical doses to the public are calculated.

TABLE 5.2.1

Pathway Dose Factors, RI

AGE GROUP: INFANT PATHWAY: INHALATION

NUCLIDE	ORGAN DOSE FACTORS; mrem/year per μCi/m^3						
	BONE	LIVER	T.BODY	THYROID	KIDNEY	LUNG	GI-LLI
H-3	0.00E+00	6.47E+02	6.47E+02	6.47E+02	6.47E+02	6.47E+02	6.47E+02
C-14	2.65E+04	5.31E+03	5.31E+03	5.31E+03	5.31E+03	5.31E+03	5.31E+03
CR-51	0.00E+00	0.00E+00	8.95E+01	5.75E+01	1.32E+01	1.28E+04	3.57E+02
MN-54	0.00E+00	2.53E+04	4.98E+03	0.00E+00	4.98E+03	1.00E+06	7.06E+03
FE-55	1.97E+04	1.17E+04	3.33E+03	0.00E+00	0.00E+00	8.69E+04	1.09E+03
FE-59	1.36E+04	2.35E+04	9.48E+03	0.00E+00	0.00E+00	1.02E+06	2.48E+04
CO-58	0.00E+00	1.22E+03	1.82E+03	0.00E+00	0.00E+00	7.77E+05	1.11E+04
CO-60	0.00E+00	8.02E+03	1.18E+04	0.00E+00	0.00E+00	4.51E+06	3.19E+04
NI-63	3.39E+05	2.04E+04	1.16E+04	0.00E+00	0.00E+00	2.09E+05	2.42E+03
ZN-65	1.93E+04	6.26E+04	3.11E+04	0.00E+00	3.25E+04	6.47E+05	5.14E+04
RB-86	0.00E+00	1.90E+05	8.82E+04	0.00E+00	0.00E+00	0.00E+00	3.04E+03
SR-89	3.98E+05	0.00E+00	1.14E+04	0.00E+00	0.00E+00	2.03E+06	6.40E+04
SR-90	4.09E+07	0.00E+00	2.59E+06	0.00E+00	0.00E+00	1.12E+07	1.31E+05
Y-91	5.88E+05	0.00E+00	1.57E+04	0.00E+00	0.00E+00	2.45E+06	7.03E+04
ZR-95	1.15E+05	2.79E+04	2.03E+04	0.00E+00	3.11E+04	1.75E+06	2.17E+04
NB-95	1.57E+04	6.43E+03	3.78E+03	0.00E+00	4.72E+03	4.79E+05	1.27E+04
RU-103	2.02E+03	0.00E+00	6.79E+02	0.00E+00	4.24E+03	5.52E+05	1.61E+04
RU-106	8.68E+04	0.00E+00	1.09E+04	0.00E+00	1.07E+05	1.16E+07	1.64E+05
AG-110M	9.98E+03	7.22E+03	5.00E+03	0.00E+00	1.09E+04	3.67E+06	3.30E+04
TE-125M	4.76E+03	1.99E+03	6.58E+02	1.62E+03	0.00E+00	4.47E+05	1.29E+04
TE-127M	1.67E+04	6.90E+03	2.07E+03	4.87E+03	3.75E+04	1.31E+06	2.73E+04
TE-129M	1.41E+04	6.09E+03	2.23E+03	5.47E+03	3.18E+04	1.68E+06	6.90E+04
I-131	3.79E+04	4.44E+04	1.96E+04	1.48E+07	5.18E+04	0.00E+00	1.06E+03
I-133	1.32E+04	1.92E+04	5.60E+03	3.56E+06	2.24E+04	0.00E+00	2.16E+03
CS-134	3.96E+05	7.03E+05	7.45E+04	0.00E+00	1.90E+05	7.97E+04	1.33E+03
CS-136	4.83E+04	1.35E+05	5.29E+04	0.00E+00	5.64E+04	1.18E+04	1.43E+03
CS-137	5.49E+05	6.12E+05	4.55E+04	0.00E+00	1.72E+05	7.13E+04	1.33E+03
BA-140	5.60E+04	5.60E+01	2.90E+03	0.00E+00	1.34E+01	1.60E+06	3.84E+04
CE-141	2.77E+04	1.67E+04	1.99E+03	0.00E+00	5.25E+03	5.17E+05	2.16E+04
CE-144	3.19E+06	1.21E+06	1.76E+05	0.00E+00	5.38E+05	9.84E+06	1.48E+05
PR-143	1.40E+04	5.24E+03	6.99E+02	0.00E+00	1.97E+03	4.33E+05	3.72E+04
ND-147	7.94E+03	8.13E+03	5.00E+02	0.00E+00	3.15E+03	3.22E+05	3.12E+04

TABLE 5.2.2

Pathway Dose Factors, Ri

AGE GROUP: CHILD PATHWAY: INHALATION

NUCLIDE	ORGAN DOSE FACTORS; mrem/year per $\mu Ci/m^3$						
	BONE	LIVER	T.BODY	THYROID	KIDNEY	LUNG	GI-LLI
H-3	0.00E+00	1.12E+03	1.12E+03	1.12E+03	1.12E+03	1.12E+03	1.12E+03
C-14	3.59E+04	6.73E+03	6.73E+03	6.73E+03	6.73E+03	6.73E+03	6.73E+03
CR-51	0.00E+00	0.00E+00	1.54E+02	8.55E+01	2.43E+01	1.70E+04	1.08E+03
MN-54	0.00E+00	4.29E+04	9.51E+03	0.00E+00	1.00E+04	1.58E+06	2.29E+04
FE-55	4.74E+04	2.52E+04	7.77E+03	0.00E+00	0.00E+00	1.11E+05	2.87E+03
FE-59	2.07E+04	3.34E+04	1.67E+04	0.00E+00	0.00E+00	1.27E+06	7.07E+04
CO-58	0.00E+00	1.77E+03	3.16E+03	0.00E+00	0.00E+00	1.11E+06	3.44E+04
CO-60	0.00E+00	1.31E+04	2.26E+04	0.00E+00	0.00E+00	7.07E+06	9.62E+04
NI-63	8.21E+05	4.63E+04	2.80E+04	0.00E+00	0.00E+00	2.75E+05	6.33E+03
ZN-65	4.26E+04	1.13E+05	7.03E+04	0.00E+00	7.14E+04	9.95E+05	1.63E+04
RB-86	0.00E+00	1.98E+05	1.14E+05	0.00E+00	0.00E+00	0.00E+00	7.99E+03
SR-89	5.99E+05	0.00E+00	1.72E+04	0.00E+00	0.00E+00	2.16E+06	1.67E+05
SR-90	1.01E+08	0.00E+00	6.44E+06	0.00E+00	0.00E+00	1.48E+07	3.43E+05
Y-91	9.14E+05	0.00E+00	2.44E+04	0.00E+00	0.00E+00	2.63E+06	1.84E+05
ZR-95	1.90E+05	4.18E+04	3.70E+04	0.00E+00	5.96E+04	2.23E+06	6.11E+04
NB-95	2.35E+04	9.18E+03	6.55E+03	0.00E+00	8.62E+03	6.14E+05	3.70E+04
RU-103	2.79E+03	0.00E+00	1.07E+03	0.00E+00	7.03E+03	6.62E+05	4.48E+04
RU-106	1.36E+05	0.00E+00	1.69E+04	0.00E+00	1.84E+05	1.43E+07	4.29E+05
AG-110M	1.69E+04	1.14E+04	9.14E+03	0.00E+00	2.12E+04	5.48E+06	1.00E+05
TE-125M	6.73E+03	2.33E+03	9.14E+02	1.92E+03	0.00E+00	4.77E+05	3.38E+04
TE-127M	2.49E+04	8.55E+03	3.02E+03	6.07E+03	6.36E+04	1.48E+06	7.14E+04
TE-129M	1.92E+04	6.85E+03	3.04E+03	6.33E+03	5.03E+04	1.76E+06	1.82E+05
I-131	4.81E+04	4.81E+04	2.73E+04	1.62E+07	7.88E+04	0.00E+00	2.84E+03
I-133	1.66E+04	2.03E+04	7.70E+03	3.85E+06	3.38E+04	0.00E+00	5.48E+03
CS-134	6.51E+05	1.01E+06	2.25E+05	0.00E+00	3.30E+05	1.21E+05	3.85E+03
CS-136	6.51E+04	1.71E+05	1.16E+05	0.00E+00	9.55E+04	1.45E+04	4.18E+03
CS-137	9.07E+05	8.25E+05	1.28E+05	0.00E+00	2.82E+05	1.04E+05	3.62E+03
BA-140	7.40E+04	6.48E+01	4.33E+03	0.00E+00	2.11E+01	1.74E+06	1.02E+05
CE-141	3.92E+04	1.95E+04	2.90E+03	0.00E+00	8.55E+03	5.44E+05	5.66E+04
CE-144	6.77E+06	2.12E+06	3.61E+05	0.00E+00	1.17E+06	1.20E+07	3.89E+05
PR-143	1.85E+04	5.55E+03	9.14E+02	0.00E+00	3.00E+03	4.33E+05	9.73E+04
ND-147	1.08E+04	8.73E+03	6.81E+02	0.00E+00	4.81E+03	3.28E+05	8.21E+04

TABLE 5.2.3

Pathway Dose Factors, RI

AGE GROUP: TEEN PATHWAY: INHALATION

NUCLIDE	ORGAN DOSE FACTORS; mrem/year per μCi/m^3						
	BONE	LIVER	T.BODY	THYROID	KIDNEY	LUNG	GI-LLI
H-3	0.00E+00	1.27E+03	1.27E+03	1.27E+03	1.27E+03	1.27E+03	1.27E+03
C-14	2.60E+04	4.87E+03	4.87E+03	4.87E+03	4.87E+03	4.87E+03	4.87E+03
CR-51	0.00E+00	0.00E+00	1.35E+02	7.50E+01	3.07E+01	2.10E+04	3.00E+03
MN-54	0.00E+00	5.11E+04	8.40E+03	0.00E+00	1.27E+04	1.98E+06	6.68E+04
FE-55	3.34E+04	2.38E+04	5.54E+03	0.00E+00	0.00E+00	1.24E+05	6.39E+03
FE-59	1.59E+04	3.70E+04	1.43E+04	0.00E+00	0.00E+00	1.53E+06	1.78E+05
CO-58	0.00E+00	2.07E+03	2.78E+03	0.00E+00	0.00E+00	1.34E+06	9.52E+04
CO-60	0.00E+00	1.51E+04	1.98E+04	0.00E+00	0.00E+00	8.72E+06	2.59E+05
NI-63	5.80E+05	4.34E+04	1.98E+04	0.00E+00	0.00E+00	3.07E+05	1.42E+04
ZN-65	3.86E+04	1.34E+05	6.24E+04	0.00E+00	8.64E+04	1.24E+06	4.66E+04
RB-86	0.00E+00	1.90E+05	8.40E+04	0.00E+00	0.00E+00	0.00E+00	1.77E+04
SR-89	4.34E+05	0.00E+00	1.25E+04	0.00E+00	0.00E+00	2.42E+06	3.71E+05
SR-90	1.08E+08	0.00E+00	6.68E+06	0.00E+00	0.00E+00	1.65E+07	7.65E+05
Y-91	6.61E+05	0.00E+00	1.77E+04	0.00E+00	0.00E+00	2.94E+06	4.09E+05
ZR-95	1.46E+05	4.58E+04	3.15E+04	0.00E+00	6.74E+04	2.69E+06	1.49E+05
NB-95	1.86E+04	1.03E+04	5.66E+03	0.00E+00	1.00E+04	7.51E+05	9.68E+04
RU-103	2.10E+03	0.00E+00	8.96E+02	0.00E+00	7.43E+03	7.83E+05	1.09E+05
RU-106	9.84E+04	0.00E+00	1.24E+04	0.00E+00	1.90E+05	1.61E+07	9.60E+05
AG-110M	1.38E+04	1.31E+04	7.99E+03	0.00E+00	2.50E+04	6.75E+06	2.73E+05
TE-125M	4.88E+03	2.24E+03	6.67E+02	1.40E+03	0.00E+00	5.36E+05	7.50E+04
TE-127M	1.80E+04	8.16E+03	2.18E+03	4.38E+03	6.54E+04	1.66E+06	1.59E+05
TE-129M	1.39E+04	6.58E+03	2.25E+03	4.58E+03	5.19E+04	1.98E+06	4.05E+05
I-131	3.54E+04	4.91E+04	2.64E+04	1.46E+07	8.40E+04	0.00E+00	6.49E+03
I-133	1.22E+04	2.05E+04	6.22E+03	2.92E+06	3.59E+04	0.00E+00	1.03E+04
CS-134	5.02E+05	1.13E+06	5.49E+05	0.00E+00	3.75E+05	1.46E+05	9.76E+03
CS-136	5.15E+04	1.94E+05	1.37E+05	0.00E+00	1.10E+05	1.78E+04	1.09E+04
CS-137	6.70E+05	8.48E+05	3.11E+05	0.00E+00	3.04E+05	1.21E+05	8.48E+03
BA-140	5.47E+04	6.70E+01	3.52E+03	0.00E+00	2.28E+01	2.03E+06	2.29E+05
CE-141	2.84E+04	1.90E+04	2.17E+03	0.00E+00	8.88E+03	6.14E+05	1.26E+05
CE-144	4.89E+06	2.02E+06	2.62E+05	0.00E+00	1.21E+06	1.34E+07	8.64E+05
PR-143	1.34E+04	5.31E+03	6.62E+02	0.00E+00	3.09E+03	4.83E+05	2.14E+05
ND-147	7.86E+03	8.56E+03	5.13E+02	0.00E+00	5.02E+03	3.72E+05	1.82E+05

TABLE 5.2.4

Pathway Dose Factors, Ri

AGE GROUP: ADULT PATHWAY: INHALATION

NUCLIDE	ORGAN DOSE FACTORS; mrem/year per $\mu Ci/m^3$						
	BONE	LIVER	T.BODY	THYROID	KIDNEY	LUNG	GI-LLI
H-3	0.00E+00	1.26E+03	1.26E+03	1.26E+03	1.26E+03	1.26E+03	1.26E+03
C-14	1.82E+04	3.41E+03	3.41E+03	3.41E+03	3.41E+03	3.41E+03	3.41E+03
CR-51	0.00E+00	0.00E+00	1.00E+02	5.95E+01	2.28E+01	1.44E+04	3.32E+03
MN-54	0.00E+00	3.96E+04	6.30E+03	0.00E+00	9.84E+03	1.40E+06	7.74E+04
FE-55	2.46E+04	1.70E+04	3.94E+03	0.00E+00	0.00E+00	7.21E+04	6.03E+03
FE-59	1.18E+04	2.78E+04	1.06E+04	0.00E+00	0.00E+00	1.02E+06	1.88E+05
CO-58	0.00E+00	1.58E+03	2.07E+03	0.00E+00	0.00E+00	9.28E+05	1.06E+05
CO-60	0.00E+00	1.15E+04	1.48E+04	0.00E+00	0.00E+00	5.97E+06	2.85E+05
NI-63	4.32E+05	3.14E+04	1.45E+04	0.00E+00	0.00E+00	1.78E+05	1.34E+04
ZN-65	3.24E+04	1.03E+05	4.66E+04	0.00E+00	6.90E+04	8.64E+05	5.34E+04
RB-86	0.00E+00	1.35E+05	5.90E+04	0.00E+00	0.00E+00	0.00E+00	1.66E+04
SR-89	3.04E+05	0.00E+00	8.72E+03	0.00E+00	0.00E+00	1.40E+06	3.50E+05
SR-90	9.92E+07	0.00E+00	6.10E+06	0.00E+00	0.00E+00	9.60E+06	7.22E+05
Y-91	4.62E+05	0.00E+00	1.24E+04	0.00E+00	0.00E+00	1.70E+06	3.85E+05
ZR-95	1.07E+05	3.44E+04	2.33E+04	0.00E+00	5.42E+04	1.77E+06	1.50E+05
NB-95	1.41E+04	7.82E+03	4.21E+03	0.00E+00	7.74E+03	5.05E+05	1.04E+05
RU-103	1.53E+03	0.00E+00	6.58E+02	0.00E+00	5.83E+03	5.05E+05	1.10E+05
RU-106	6.91E+04	0.00E+00	8.72E+03	0.00E+00	1.34E+05	9.36E+06	9.12E+05
AG-110M	1.08E+04	1.00E+04	5.94E+03	0.00E+00	1.97E+04	4.63E+06	3.02E+05
TE-125M	3.42E+03	1.58E+03	4.67E+02	1.05E+03	1.24E+04	3.14E+05	7.06E+04
TE-127M	1.26E+04	5.77E+03	1.57E+03	3.29E+03	4.58E+04	9.60E+05	1.50E+05
TE-129M	9.76E+03	4.67E+03	1.58E+03	3.44E+03	3.66E+04	1.16E+06	3.83E+05
I-131	2.52E+04	3.58E+04	2.05E+04	1.19E+07	6.13E+04	0.00E+00	6.28E+03
I-133	8.64E+03	1.48E+04	4.52E+03	2.15E+06	2.58E+04	0.00E+00	8.88E+03
CS-134	3.73E+05	8.43E+05	7.28E+05	0.00E+00	2.87E+05	9.76E+04	1.04E+04
CS-136	3.90E+04	1.46E+05	1.10E+05	0.00E+00	8.56E+04	1.20E+04	1.17E+04
CS-137	4.78E+05	6.21E+05	4.28E+05	0.00E+00	2.22E+05	7.52E+04	8.40E+03
BA-140	3.90E+04	4.90E+01	2.57E+03	0.00E+00	1.67E+01	1.27E+06	2.18E+05
CE-141	1.99E+04	1.35E+04	1.53E+03	0.00E+00	6.26E+03	3.62E+05	1.20E+05
CE-144	3.43E+06	1.43E+06	1.84E+05	0.00E+00	8.48E+05	7.78E+06	8.16E+05
PR-143	9.36E+03	3.75E+03	4.64E+02	0.00E+00	2.16E+03	2.81E+05	2.00E+05
ND-147	5.27E+03	6.10E+03	3.65E+02	0.00E+00	3.56E+03	2.21E+05	1.73E+05

TABLE 5.3.1

Pathway Dose Factors, Ri

AGE GROUP: ALL PATHWAY: GROUND PLANE

NUCLIDE	ORGAN DOSE FACTORS*	
	T.BODY	SKIN
H-3	0.00E+00	0.00E+00
C-14	0.00E+00	0.00E+00
CR-51	4.65E+06	5.50E+06
MN-54	1.39E+09	1.62E+09
FE-55	0.00E+00	0.00E+00
FE-59	2.73E+08	3.21E+08
CO-58	3.79E+08	4.44E+08
CO-60	2.15E+10	2.53E+10
NI-63	0.00E+00	0.00E+00
ZN-65	7.47E+08	8.59E+08
RB-86	8.97E+06	1.03E+07
SR-89	2.16E+04	2.51E+04
SR-90	0.00E+00	0.00E+00
Y-91	1.07E+06	1.21E+06
ZR-95	2.45E+08	2.84E+08
NB-95	1.37E+08	1.61E+08
RU-103	1.08E+08	1.26E+08
RU-106	4.22E+08	5.06E+08
AG-110M	3.44E+09	4.01E+09
TE-125M	1.55E+06	2.13E+06
TE-127M	9.17E+04	1.08E+05
TE-129M	1.98E+07	2.31E+07
I-131	1.72E+07	2.09E+07
I-133	2.45E+06	2.98E+06
CS-134	6.86E+09	8.00E+09
CS-136	1.51E+08	1.71E+08
CS-137	1.03E+10	1.20E+10
BA-140	2.06E+07	2.36E+07
CE-141	1.37E+07	1.54E+07
CE-144	6.96E+07	8.05E+07
PR-143	0.00E+00	0.00E+00
ND-147	8.39E+06	1.01E+07

* m^2 - mrem/year per μCi/sec.

TABLE 5.4.1

Pathway Dose Factors, Ri

AGE GROUP: INFANT PATHWAY: GRASS-COW-MILK

NUCLIDE	ORGAN DOSE FACTORS; m² - mrem/year per μCi/sec						
	BONE	LIVER	T.BODY	THYROID	KIDNEY	LUNG	GI-LLI
H-3	0.00E+00	2.38E+03	2.38E+03	2.38E+03	2.38E+03	2.38E+03	2.38E+03
C-14	2.34E+09	5.00E+08	5.00E+08	5.00E+08	5.00E+08	5.00E+08	5.00E+08
CR-51	0.00E+00	0.00E+00	1.61E+05	1.05E+05	2.30E+04	2.05E+05	4.70E+06
MN-54	0.00E+00	3.91E+07	8.85E+06	0.00E+00	8.65E+06	0.00E+00	1.43E+07
FE-55	1.35E+08	8.74E+07	2.34E+07	0.00E+00	0.00E+00	4.27E+07	1.11E+07
FE-59	2.25E+08	3.93E+08	1.55E+08	0.00E+00	0.00E+00	1.16E+08	1.88E+08
CO-58	0.00E+00	2.43E+07	6.06E+07	0.00E+00	0.00E+00	0.00E+00	6.05E+07
CO-60	0.00E+00	8.83E+07	2.08E+08	0.00E+00	0.00E+00	0.00E+00	2.10E+08
NI-63	3.50E+10	2.16E+09	1.21E+09	0.00E+00	0.00E+00	0.00E+00	1.08E+08
ZN-65	5.56E+09	1.91E+10	8.79E+09	0.00E+00	9.24E+09	0.00E+00	1.61E+10
RB-86	0.00E+00	2.23E+10	1.10E+10	0.00E+00	0.00E+00	0.00E+00	5.70E+08
SR-89	1.26E+10	0.00E+00	3.62E+08	0.00E+00	0.00E+00	0.00E+00	2.59E+08
SR-90	1.22E+11	0.00E+00	3.10E+10	0.00E+00	0.00E+00	0.00E+00	1.52E+09
Y-91	7.34E+04	0.00E+00	1.95E+03	0.00E+00	0.00E+00	0.00E+00	5.26E+06
ZR-95	6.81E+03	1.66E+03	1.18E+03	0.00E+00	1.79E+03	0.00E+00	8.27E+05
NB-95	5.94E+05	2.45E+05	1.41E+05	0.00E+00	1.75E+05	0.00E+00	2.07E+08
RU-103	8.68E+03	0.00E+00	2.90E+03	0.00E+00	1.81E+04	0.00E+00	1.06E+05
RU-106	1.91E+05	0.00E+00	2.38E+04	0.00E+00	2.25E+05	0.00E+00	1.45E+06
AG-110M	3.86E+08	2.82E+08	1.87E+08	0.00E+00	4.03E+08	0.00E+00	1.46E+10
TE-125M	1.51E+08	5.05E+07	2.04E+07	5.08E+07	0.00E+00	0.00E+00	7.19E+07
TE-127M	4.22E+08	1.40E+08	5.10E+07	1.22E+08	1.04E+09	0.00E+00	1.70E+08
TE-129M	5.58E+08	1.91E+08	8.59E+07	2.14E+08	1.39E+09	0.00E+00	3.33E+08
I-131	2.72E+09	3.21E+09	1.41E+09	1.05E+12	3.75E+09	0.00E+00	1.15E+08
I-133	3.63E+07	5.29E+07	1.55E+07	9.62E+09	6.22E+07	0.00E+00	8.96E+06
CS-134	3.65E+10	6.81E+10	6.88E+09	0.00E+00	1.75E+10	7.19E+09	1.85E+08
CS-136	1.98E+09	5.83E+09	2.18E+09	0.00E+00	2.32E+09	4.75E+08	8.85E+07
CS-137	5.15E+10	6.03E+10	4.27E+09	0.00E+00	1.62E+10	6.55E+09	1.89E+08
BA-140	2.42E+08	2.42E+05	1.25E+07	0.00E+00	5.75E+04	1.49E+05	5.94E+07
CE-141	4.34E+04	2.65E+04	3.12E+03	0.00E+00	8.17E+03	0.00E+00	1.37E+07
CE-144	2.33E+06	9.53E+05	1.30E+05	0.00E+00	3.85E+05	0.00E+00	1.34E+08
PR-143	1.49E+03	5.56E+02	7.37E+01	0.00E+00	2.07E+02	0.00E+00	7.84E+05
ND-147	8.83E+02	9.07E+02	5.55E+01	0.00E+00	3.50E+02	0.00E+00	5.75E+05

TABLE 5.4.2

Pathway Dose Factors, Ri

AGE GROUP: CHILD PATHWAY: GRASS-COW-MILK

NUCLIDE	ORGAN DOSE FACTORS; m² - mrem/year per μCi/sec						
	BONE	LIVER	T.BODY	THYROID	KIDNEY	LUNG	GI-LLI
H-3	0.00E+00	1.57E+03	1.57E+03	1.57E+03	1.57E+03	1.57E+03	1.57E+03
C-14	1.20E+09	2.39E+08	2.39E+08	2.39E+08	2.39E+08	2.39E+08	2.39E+08
CR-51	0.00E+00	0.00E+00	1.02E+05	5.65E+04	1.54E+04	1.03E+05	5.40E+06
MN-54	0.00E+00	2.10E+07	5.59E+06	0.00E+00	5.89E+06	0.00E+00	1.76E+07
FE-55	1.12E+08	5.94E+07	1.84E+07	0.00E+00	0.00E+00	3.36E+07	1.10E+07
FE-59	1.20E+08	1.95E+08	9.70E+07	0.00E+00	0.00E+00	5.65E+07	2.03E+08
CO-58	0.00E+00	1.21E+07	3.72E+07	0.00E+00	0.00E+00	0.00E+00	7.08E+07
CO-60	0.00E+00	4.32E+07	1.27E+08	0.00E+00	0.00E+00	0.00E+00	2.39E+08
NI-63	2.97E+10	1.59E+09	1.01E+09	0.00E+00	0.00E+00	0.00E+00	1.07E+08
ZN-65	4.14E+09	1.10E+10	6.86E+09	0.00E+00	6.95E+09	0.00E+00	1.94E+09
RB-86	0.00E+00	8.78E+09	5.40E+09	0.00E+00	0.00E+00	0.00E+00	5.65E+08
SR-89	6.63E+09	0.00E+00	1.89E+08	0.00E+00	0.00E+00	0.00E+00	2.57E+08
SR-90	1.12E+11	0.00E+00	2.84E+10	0.00E+00	0.00E+00	0.00E+00	1.51E+09
Y-91	3.91E+04	0.00E+00	1.05E+03	0.00E+00	0.00E+00	0.00E+00	5.21E+06
ZR-95	3.84E+03	8.43E+02	7.51E+02	0.00E+00	1.21E+03	0.00E+00	8.80E+05
NB-95	3.18E+05	1.24E+05	8.86E+04	0.00E+00	1.16E+05	0.00E+00	2.29E+08
RU-103	4.29E+03	0.00E+00	1.65E+03	0.00E+00	1.08E+04	0.00E+00	1.11E+05
RU-106	9.25E+04	0.00E+00	1.15E+04	0.00E+00	1.25E+05	0.00E+00	1.44E+06
AG-110M	2.09E+08	1.41E+08	1.13E+08	0.00E+00	2.63E+08	0.00E+00	1.68E+10
TE-125M	7.39E+07	2.00E+07	9.85E+06	2.07E+07	0.00E+00	0.00E+00	7.13E+07
TE-127M	2.08E+08	5.61E+07	2.47E+07	4.98E+07	5.94E+08	0.00E+00	1.69E+08
TE-129M	2.72E+08	7.59E+07	4.22E+07	8.76E+07	7.98E+08	0.00E+00	3.31E+08
I-131	1.31E+09	1.31E+09	7.46E+08	4.34E+11	2.16E+09	0.00E+00	1.17E+08
I-133	1.72E+07	2.13E+07	8.05E+06	3.95E+09	3.55E+07	0.00E+00	8.58E+06
CS-134	2.27E+10	3.72E+10	7.85E+09	0.00E+00	1.15E+10	4.14E+09	2.01E+08
CS-136	1.01E+09	2.79E+09	1.80E+09	0.00E+00	1.49E+09	2.21E+08	9.80E+07
CS-137	3.23E+10	3.09E+10	4.56E+09	0.00E+00	1.01E+10	3.62E+09	1.93E+08
BA-140	1.18E+08	1.03E+05	6.86E+06	0.00E+00	3.35E+04	6.14E+04	5.96E+07
CE-141	2.19E+04	1.09E+04	1.62E+03	0.00E+00	4.79E+03	0.00E+00	1.36E+07
CE-144	1.63E+06	5.09E+05	8.67E+04	0.00E+00	2.82E+05	0.00E+00	1.33E+08
PR-143	7.18E+02	2.16E+02	3.56E+01	0.00E+00	1.17E+02	0.00E+00	7.75E+05
ND-147	4.45E+02	3.61E+02	2.79E+01	0.00E+00	1.98E+02	0.00E+00	5.71E+05

TABLE 5.4.3

Pathway Dose Factors, Ri

AGE GROUP: TEEN PATHWAY: GRASS-COW-MILK

NUCLIDE	ORGAN DOSE FACTORS; m² - mrem/year per μCi/sec						
	BONE	LIVER	T.BODY	THYROID	KIDNEY	LUNG	GI-LLI
H-3	0.00E+00	9.93E+02	9.93E+02	9.93E+02	9.93E+02	9.93E+02	9.93E+02
C-14	4.86E+08	9.73E+07	9.73E+07	9.73E+07	9.73E+07	9.73E+07	9.73E+07
CR-51	0.00E+00	0.00E+00	4.99E+04	2.77E+04	1.09E+04	7.13E+04	8.39E+06
MN-54	0.00E+00	1.40E+07	2.78E+06	0.00E+00	4.19E+06	0.00E+00	2.88E+07
FE-55	4.46E+07	3.16E+07	7.37E+06	0.00E+00	0.00E+00	2.01E+07	1.37E+07
FE-59	5.19E+07	1.21E+08	4.68E+07	0.00E+00	0.00E+00	3.82E+07	2.86E+08
CO-58	0.00E+00	7.94E+06	1.83E+07	0.00E+00	0.00E+00	0.00E+00	1.10E+08
CO-60	0.00E+00	2.78E+07	6.27E+07	0.00E+00	0.00E+00	0.00E+00	3.62E+08
NI-63	1.18E+10	8.36E+08	4.01E+08	0.00E+00	0.00E+00	0.00E+00	1.33E+08
ZN-65	2.11E+09	7.32E+09	3.42E+09	0.00E+00	4.69E+09	0.00E+00	3.10E+09
RB-86	0.00E+00	4.73E+09	2.22E+09	0.00E+00	0.00E+00	0.00E+00	7.00E+08
SR-89	2.68E+09	0.00E+00	7.67E+07	0.00E+00	0.00E+00	0.00E+00	3.19E+08
SR-90	6.62E+10	0.00E+00	1.63E+10	0.00E+00	0.00E+00	0.00E+00	1.86E+09
Y-91	1.58E+04	0.00E+00	4.24E+02	0.00E+00	0.00E+00	0.00E+00	6.48E+06
ZR-95	1.65E+03	5.21E+02	3.58E+02	0.00E+00	7.65E+02	0.00E+00	1.20E+06
NB-95	1.41E+05	7.82E+04	4.30E+04	0.00E+00	7.58E+04	0.00E+00	3.34E+08
RU-103	1.81E+03	0.00E+00	7.75E+02	0.00E+00	6.39E+03	0.00E+00	1.51E+05
RU-106	3.76E+04	0.00E+00	4.73E+03	0.00E+00	7.24E+04	0.00E+00	1.80E+06
AG-110M	9.64E+07	9.12E+07	5.55E+07	0.00E+00	1.74E+08	0.00E+00	2.56E+10
TE-125M	3.01E+07	1.08E+07	4.02E+06	8.40E+06	0.00E+00	0.00E+00	8.87E+07
TE-127M	8.45E+07	3.00E+07	1.00E+07	2.01E+07	3.42E+08	0.00E+00	2.11E+08
TE-129M	1.10E+08	4.09E+07	1.74E+07	3.56E+07	4.61E+08	0.00E+00	4.14E+08
I-131	5.38E+08	7.53E+08	4.05E+08	2.20E+11	1.30E+09	0.00E+00	1.49E+08
I-133	7.08E+06	1.20E+07	3.66E+06	1.68E+09	2.11E+07	0.00E+00	9.09E+06
CS-134	9.83E+09	2.31E+10	1.07E+10	0.00E+00	7.35E+09	2.81E+09	2.88E+08
CS-136	4.49E+08	1.77E+09	1.19E+09	0.00E+00	9.63E+08	1.52E+08	1.42E+08
CS-137	1.34E+10	1.78E+10	6.21E+09	0.00E+00	6.06E+09	2.36E+09	2.54E+08
BA-140	4.87E+07	5.97E+04	3.14E+06	0.00E+00	2.02E+04	4.01E+04	7.51E+07
CE-141	8.89E+03	5.94E+03	6.82E+02	0.00E+00	2.80E+03	0.00E+00	1.70E+07
CE-144	6.59E+05	2.73E+05	3.54E+04	0.00E+00	1.63E+05	0.00E+00	1.66E+08
PR-143	2.90E+02	1.16E+02	1.44E+01	0.00E+00	6.73E+01	0.00E+00	9.55E+05
ND-147	1.81E+02	1.97E+02	1.18E+01	0.00E+00	1.16E+02	0.00E+00	7.12E+05

TABLE 5.4.4

Pathway Dose Factors, Ri

AGE GROUP: ADULT PATHWAY: GRASS-COW-MILK

NUCLIDE	ORGAN DOSE FACTORS; m² - mrem/year per μCi/sec						
	BONE	LIVER	T.BODY	THYROID	KIDNEY	LUNG	GI-LLI
H-3	0.00E+00	7.62E+02	7.62E+02	7.62E+02	7.62E+02	7.62E+02	7.62E+02
C-14	2.63E+08	5.26E+07	5.26E+07	5.26E+07	5.26E+07	5.26E+07	5.26E+07
CR-51	0.00E+00	0.00E+00	2.85E+04	1.70E+04	6.28E+03	3.78E+04	7.17E+06
MN-54	0.00E+00	8.40E+06	1.60E+06	0.00E+00	2.50E+06	0.00E+00	2.57E+07
FE-55	2.51E+07	1.73E+07	4.04E+06	0.00E+00	0.00E+00	9.66E+06	9.93E+06
FE-59	2.97E+07	6.97E+07	2.67E+07	0.00E+00	0.00E+00	1.95E+07	2.32E+08
CO-58	0.00E+00	4.71E+06	1.05E+07	0.00E+00	0.00E+00	0.00E+00	9.54E+07
CO-60	0.00E+00	1.64E+07	3.61E+07	0.00E+00	0.00E+00	0.00E+00	3.08E+08
NI-63	6.72E+09	4.65E+08	2.25E+08	0.00E+00	0.00E+00	0.00E+00	9.71E+07
ZN-65	1.37E+09	4.36E+09	1.97E+09	0.00E+00	2.91E+09	0.00E+00	2.74E+09
RB-86	0.00E+00	2.59E+09	1.21E+09	0.00E+00	0.00E+00	0.00E+00	5.10E+08
SR-89	1.45E+09	0.00E+00	4.16E+07	0.00E+00	0.00E+00	0.00E+00	2.32E+08
SR-90	4.67E+10	0.00E+00	1.15E+10	0.00E+00	0.00E+00	0.00E+00	1.35E+09
Y-91	8.57E+03	0.00E+00	2.29E+02	0.00E+00	0.00E+00	0.00E+00	4.72E+06
ZR-95	9.41E+02	3.02E+02	2.04E+02	0.00E+00	4.74E+02	0.00E+00	9.57E+05
NB-95	8.24E+04	4.58E+04	2.46E+04	0.00E+00	4.53E+04	0.00E+00	2.78E+08
RU-103	1.02E+03	0.00E+00	4.38E+02	0.00E+00	3.88E+03	0.00E+00	1.19E+05
RU-106	2.04E+04	0.00E+00	2.58E+03	0.00E+00	3.93E+04	0.00E+00	1.32E+06
AG-110M	5.81E+07	5.38E+07	3.19E+07	0.00E+00	1.06E+08	0.00E+00	2.19E+10
TE-125M	1.63E+07	5.89E+06	2.18E+06	4.89E+06	6.61E+07	0.00E+00	6.49E+07
TE-127M	4.57E+07	1.63E+07	5.57E+06	1.17E+07	1.86E+08	0.00E+00	1.53E+08
TE-129M	6.01E+07	2.24E+07	9.51E+06	2.06E+07	2.51E+08	0.00E+00	3.02E+08
I-131	2.96E+08	4.23E+08	2.42E+08	1.39E+11	7.25E+08	0.00E+00	1.12E+08
I-133	3.87E+06	6.73E+06	2.05E+06	9.88E+08	1.17E+07	0.00E+00	6.04E+06
CS-134	5.64E+09	1.34E+10	1.10E+10	0.00E+00	4.34E+09	1.44E+09	2.35E+08
CS-136	2.63E+08	1.04E+09	7.48E+08	0.00E+00	5.78E+08	7.92E+07	1.18E+08
CS-137	7.37E+09	1.01E+10	6.60E+09	0.00E+00	3.42E+09	1.14E+09	1.95E+08
BA-140	2.69E+07	3.38E+04	1.76E+06	0.00E+00	1.15E+04	1.94E+04	5.54E+07
CE-141	4.84E+03	3.27E+03	3.71E+02	0.00E+00	1.52E+03	0.00E+00	1.25E+07
CE-144	3.57E+05	1.49E+05	1.92E+04	0.00E+00	8.85E+04	0.00E+00	1.21E+08
PR-143	1.57E+02	6.32E+01	7.81E+00	0.00E+00	3.65E+01	0.00E+00	6.90E+05
ND-147	9.40E+01	1.09E+02	6.50E+00	0.00E+00	6.35E+01	0.00E+00	5.22E+05

TABLE 5.5.1

Pathway Dose Factors, Ri

AGE GROUP: INFANT PATHWAY: GRASS-GOAT-MILK

NUCLIDE	ORGAN DOSE FACTORS; m² - mrem/year per μCi/sec						
	BONE	LIVER	T.BODY	THYROID	KIDNEY	LUNG	GI-LLI
H-3	0.00E+00	4.86E+03	4.86E+03	4.86E+03	4.86E+03	4.86E+03	4.86E+03
C-14	2.34E+09	5.00E+08	5.00E+08	5.00E+08	5.00E+08	5.00E+08	5.00E+08
CR-51	0.00E+00	0.00E+00	1.94E+04	1.26E+04	2.76E+03	2.46E+04	5.64E+05
MN-54	0.00E+00	4.68E+06	1.06E+06	0.00E+00	1.04E+06	0.00E+00	1.72E+06
FE-55	1.76E+06	1.14E+06	3.03E+05	0.00E+00	0.00E+00	5.55E+05	1.44E+05
FE-59	2.92E+06	5.10E+06	2.01E+06	0.00E+00	0.00E+00	1.51E+06	2.44E+06
CO-58	0.00E+00	2.91E+06	7.26E+06	0.00E+00	0.00E+00	0.00E+00	7.25E+06
CO-60	0.00E+00	1.06E+07	2.50E+07	0.00E+00	0.00E+00	0.00E+00	2.52E+07
NI-63	4.19E+09	2.59E+08	1.46E+08	0.00E+00	0.00E+00	0.00E+00	1.29E+07
ZN-65	6.67E+08	2.29E+09	1.05E+09	0.00E+00	1.11E+09	0.00E+00	1.93E+09
RB-86	0.00E+00	2.67E+09	1.32E+09	0.00E+00	0.00E+00	0.00E+00	6.83E+07
SR-89	2.65E+10	0.00E+00	7.59E+08	0.00E+00	0.00E+00	0.00E+00	5.44E+08
SR-90	2.55E+11	0.00E+00	6.50E+10	0.00E+00	0.00E+00	0.00E+00	3.19E+09
Y-91	8.80E+03	0.00E+00	2.34E+02	0.00E+00	0.00E+00	0.00E+00	6.31E+05
ZR-95	8.17E+02	1.99E+02	1.41E+02	0.00E+00	2.15E+02	0.00E+00	9.91E+04
NB-95	7.13E+04	2.93E+04	1.70E+04	0.00E+00	2.10E+04	0.00E+00	2.48E+07
RU-103	1.04E+03	0.00E+00	3.48E+02	0.00E+00	2.17E+03	0.00E+00	1.27E+04
RU-106	2.28E+04	0.00E+00	2.85E+03	0.00E+00	2.70E+04	0.00E+00	1.73E+05
AG-110M	4.63E+07	3.38E+07	2.24E+07	0.00E+00	4.84E+07	0.00E+00	1.75E+09
TE-125M	1.81E+07	6.05E+06	2.45E+06	6.09E+06	0.00E+00	0.00E+00	8.62E+06
TE-127M	5.06E+07	1.68E+07	6.12E+06	1.46E+07	1.24E+08	0.00E+00	2.04E+07
TE-129M	6.69E+07	2.29E+07	1.03E+07	2.57E+07	1.67E+08	0.00E+00	3.99E+07
I-131	3.27E+09	3.85E+09	1.69E+09	1.27E+12	4.50E+09	0.00E+00	1.37E+08
I-133	4.36E+07	6.35E+07	1.86E+07	1.15E+10	7.46E+07	0.00E+00	1.07E+07
CS-134	1.09E+11	2.04E+11	2.06E+10	0.00E+00	5.26E+10	2.15E+10	5.55E+08
CS-136	5.94E+09	1.75E+10	6.52E+09	0.00E+00	6.96E+09	1.42E+09	2.65E+08
CS-137	1.54E+11	1.81E+11	1.28E+10	0.00E+00	4.85E+10	1.96E+10	5.65E+08
BA-140	2.90E+07	2.90E+04	1.50E+06	0.00E+00	6.89E+03	1.78E+04	7.13E+06
CE-141	5.21E+03	3.18E+03	3.74E+02	0.00E+00	9.79E+02	0.00E+00	1.64E+06
CE-144	2.79E+05	1.14E+05	1.56E+04	0.00E+00	4.62E+04	0.00E+00	1.60E+07
PR-143	1.78E+02	6.66E+01	8.83E+00	0.00E+00	2.48E+01	0.00E+00	9.40E+04
ND-147	1.06E+02	1.09E+02	6.66E+00	0.00E+00	4.19E+01	0.00E+00	6.89E+04

TABLE 5.5.2

Pathway Dose Factors, Ri

AGE GROUP: CHILD PATHWAY: GRASS-GOAT-MILK

NUCLIDE	ORGAN DOSE FACTORS; m² - mrem/year per μCi/sec						
	BONE	LIVER	T.BODY	THYROID	KIDNEY	LUNG	GI-LLI
H-3	0.00E+00	3.20E+03	3.20E+03	3.20E+03	3.20E+03	3.20E+03	3.20E+03
C-14	1.20E+09	2.39E+08	2.39E+08	2.39E+08	2.39E+08	2.39E+08	2.39E+08
CR-51	0.00E+00	0.00E+00	1.22E+04	6.78E+03	1.85E+03	1.24E+04	6.48E+05
MN-54	0.00E+00	2.52E+06	6.71E+05	0.00E+00	7.06E+05	0.00E+00	2.11E+06
FE-55	1.45E+06	7.71E+05	2.39E+05	0.00E+00	0.00E+00	4.36E+05	1.43E+05
FE-59	1.56E+06	2.53E+06	1.26E+06	0.00E+00	0.00E+00	7.34E+05	2.64E+06
CO-58	0.00E+00	1.46E+06	4.46E+06	0.00E+00	0.00E+00	0.00E+00	8.49E+06
CO-60	0.00E+00	5.18E+06	1.53E+07	0.00E+00	0.00E+00	0.00E+00	2.87E+07
NI-63	3.56E+09	1.91E+08	1.21E+08	0.00E+00	0.00E+00	0.00E+00	1.28E+07
ZN-65	4.96E+08	1.32E+09	8.22E+08	0.00E+00	8.33E+08	0.00E+00	2.32E+08
RB-86	0.00E+00	1.05E+09	6.47E+08	0.00E+00	0.00E+00	0.00E+00	6.77E+07
SR-89	1.39E+10	0.00E+00	3.97E+08	0.00E+00	0.00E+00	0.00E+00	5.39E+08
SR-90	2.35E+11	0.00E+00	5.95E+10	0.00E+00	0.00E+00	0.00E+00	3.16E+09
Y-91	4.69E+03	0.00E+00	1.25E+02	0.00E+00	0.00E+00	0.00E+00	6.24E+05
ZR-95	4.60E+02	1.01E+02	9.00E+01	0.00E+00	1.45E+02	0.00E+00	1.05E+05
NB-95	3.82E+04	1.49E+04	1.06E+04	0.00E+00	1.40E+04	0.00E+00	2.75E+07
RU-103	5.14E+02	0.00E+00	1.98E+02	0.00E+00	1.29E+03	0.00E+00	1.33E+04
RU-106	1.11E+04	0.00E+00	1.38E+03	0.00E+00	1.50E+04	0.00E+00	1.73E+05
AG-110M	2.51E+07	1.69E+07	1.35E+07	0.00E+00	3.15E+07	0.00E+00	2.01E+09
TE-125M	8.86E+06	2.40E+06	1.18E+06	2.49E+06	0.00E+00	0.00E+00	8.55E+06
TE-127M	2.50E+07	6.72E+06	2.96E+06	5.97E+06	7.12E+07	0.00E+00	2.02E+07
TE-129M	3.26E+07	9.10E+06	5.06E+06	1.05E+07	9.56E+07	0.00E+00	3.97E+07
I-131	1.57E+09	1.57E+09	8.95E+08	5.21E+11	2.58E+09	0.00E+00	1.40E+08
I-133	2.06E+07	2.55E+07	9.66E+06	4.74E+09	4.25E+07	0.00E+00	1.03E+07
CS-134	6.80E+10	1.12E+11	2.35E+10	0.00E+00	3.46E+10	1.24E+10	6.01E+08
CS-136	3.04E+09	8.36E+09	5.41E+09	0.00E+00	4.45E+09	6.64E+08	2.94E+08
CS-137	9.68E+10	9.26E+10	1.37E+10	0.00E+00	3.02E+10	1.09E+10	5.80E+08
BA-140	1.41E+07	1.24E+04	8.23E+05	0.00E+00	4.02E+03	7.37E+03	7.15E+06
CE-141	2.63E+03	1.31E+03	1.95E+02	0.00E+00	5.74E+02	0.00E+00	1.63E+06
CE-144	1.95E+05	6.11E+04	1.04E+04	0.00E+00	3.38E+04	0.00E+00	1.59E+07
PR-143	8.61E+01	2.59E+01	4.27E+00	0.00E+00	1.40E+01	0.00E+00	9.29E+04
ND-147	5.34E+01	4.33E+01	3.35E+00	0.00E+00	2.37E+01	0.00E+00	6.85E+04

TABLE 5.5.3

Pathway Dose Factors, Ri

AGE GROUP: TEEN PATHWAY: GRASS-GOAT-MILK

NUCLIDE	ORGAN DOSE FACTORS; m² - mrem/year per μCi/sec						
	BONE	LIVER	T.BODY	THYROID	KIDNEY	LUNG	GI-LLI
H-3	0.00E+00	2.04E+03	2.04E+03	2.04E+03	2.04E+03	2.04E+03	2.04E+03
C-14	4.86E+08	9.72E+07	9.72E+07	9.72E+07	9.72E+07	9.72E+07	9.72E+07
CR-51	0.00E+00	0.00E+00	5.99E+03	3.33E+03	1.31E+03	8.55E+03	1.01E+06
MN-54	0.00E+00	1.68E+06	3.34E+05	0.00E+00	5.02E+05	0.00E+00	3.45E+06
FE-55	5.79E+05	4.11E+05	9.58E+04	0.00E+00	0.00E+00	2.61E+05	1.78E+05
FE-59	6.74E+05	1.57E+06	6.08E+05	0.00E+00	0.00E+00	4.96E+05	3.72E+06
CO-58	0.00E+00	9.53E+05	2.20E+06	0.00E+00	0.00E+00	0.00E+00	1.31E+07
CO-60	0.00E+00	3.34E+06	7.52E+06	0.00E+00	0.00E+00	0.00E+00	4.35E+07
NI-63	1.42E+09	1.00E+08	4.81E+07	0.00E+00	0.00E+00	0.00E+00	1.60E+07
ZN-65	2.53E+08	8.78E+08	4.10E+08	0.00E+00	5.62E+08	0.00E+00	3.72E+08
RB-86	0.00E+00	5.67E+08	2.67E+08	0.00E+00	0.00E+00	0.00E+00	8.40E+07
SR-89	5.62E+09	0.00E+00	1.61E+08	0.00E+00	0.00E+00	0.00E+00	6.69E+08
SR-90	1.39E+11	0.00E+00	3.43E+10	0.00E+00	0.00E+00	0.00E+00	3.90E+09
Y-91	1.90E+03	0.00E+00	5.09E+01	0.00E+00	0.00E+00	0.00E+00	7.78E+05
ZR-95	1.98E+02	6.25E+01	4.30E+01	0.00E+00	9.18E+01	0.00E+00	1.44E+05
NB-95	1.69E+04	9.38E+03	5.16E+03	0.00E+00	9.09E+03	0.00E+00	4.01E+07
RU-103	2.17E+02	0.00E+00	9.29E+01	0.00E+00	7.66E+02	0.00E+00	1.82E+04
RU-106	4.50E+03	0.00E+00	5.68E+02	0.00E+00	8.69E+03	0.00E+00	2.16E+05
AG-110M	1.16E+07	1.09E+07	6.65E+06	0.00E+00	2.09E+07	0.00E+00	3.07E+09
TE-125M	3.61E+06	1.30E+06	4.82E+05	1.01E+06	0.00E+00	0.00E+00	1.06E+07
TE-127M	1.01E+07	3.59E+06	1.20E+06	2.41E+06	4.11E+07	0.00E+00	2.52E+07
TE-129M	1.32E+07	4.90E+06	2.09E+06	4.26E+06	5.53E+07	0.00E+00	4.96E+07
I-131	6.45E+08	9.03E+08	4.85E+08	2.64E+11	1.56E+09	0.00E+00	1.79E+08
I-133	8.49E+06	1.44E+07	4.40E+06	2.01E+09	2.53E+07	0.00E+00	1.09E+07
CS-134	2.95E+10	6.93E+10	3.22E+10	0.00E+00	2.20E+10	8.41E+09	8.62E+08
CS-136	1.35E+09	5.30E+09	3.56E+09	0.00E+00	2.89E+09	4.55E+08	4.27E+08
CS-137	4.02E+10	5.34E+10	1.86E+10	0.00E+00	1.82E+10	7.07E+09	7.60E+08
BA-140	5.84E+06	7.16E+03	3.76E+05	0.00E+00	2.43E+03	4.81E+03	9.01E+06
CE-141	1.07E+03	7.12E+02	8.18E+01	0.00E+00	3.35E+02	0.00E+00	2.04E+06
CE-144	7.90E+04	3.27E+04	4.25E+03	0.00E+00	1.95E+04	0.00E+00	1.99E+07
PR-143	3.48E+01	1.39E+01	1.73E+00	0.00E+00	8.08E+00	0.00E+00	1.15E+05
ND-147	2.18E+01	2.37E+01	1.42E+00	0.00E+00	1.39E+01	0.00E+00	8.54E+04

TABLE 5.5.4

Pathway Dose Factors, Ri

AGE GROUP: ADULT PATHWAY: GRASS-GOAT-MILK

NUCLIDE	ORGAN DOSE FACTORS; m² - mrem/year per μCi/sec						
	BONE	LIVER	T.BODY	THYROID	KIDNEY	LUNG	GI-LLI
H-3	0.00E+00	1.56E+03	1.56E+03	1.56E+03	1.56E+03	1.56E+03	1.56E+03
C-14	2.64E+08	5.27E+07	5.27E+07	5.27E+07	5.27E+07	5.27E+07	5.27E+07
CR-51	0.00E+00	0.00E+00	3.43E+03	2.05E+03	7.56E+02	4.55E+03	8.63E+05
MN-54	0.00E+00	1.01E+06	1.93E+05	0.00E+00	3.01E+05	0.00E+00	3.10E+06
FE-55	3.27E+05	2.26E+05	5.26E+04	0.00E+00	0.00E+00	1.26E+05	1.30E+05
FE-59	3.87E+05	9.09E+05	3.48E+05	0.00E+00	0.00E+00	2.54E+05	3.03E+06
CO-58	0.00E+00	5.66E+05	1.27E+06	0.00E+00	0.00E+00	0.00E+00	1.15E+07
CO-60	0.00E+00	1.97E+06	4.35E+06	0.00E+00	0.00E+00	0.00E+00	3.70E+07
NI-63	8.08E+08	5.60E+07	2.71E+07	0.00E+00	0.00E+00	0.00E+00	1.17E+07
ZN-65	1.65E+08	5.24E+08	2.37E+08	0.00E+00	3.51E+08	0.00E+00	3.30E+08
RB-86	0.00E+00	3.12E+08	1.45E+08	0.00E+00	0.00E+00	0.00E+00	6.14E+07
SR-89	3.05E+09	0.00E+00	8.76E+07	0.00E+00	0.00E+00	0.00E+00	4.89E+08
SR-90	9.84E+10	0.00E+00	2.41E+10	0.00E+00	0.00E+00	0.00E+00	2.84E+09
Y-91	1.03E+03	0.00E+00	2.76E+01	0.00E+00	0.00E+00	0.00E+00	5.68E+05
ZR-95	1.13E+02	3.63E+01	2.46E+01	0.00E+00	5.70E+01	0.00E+00	1.15E+05
NB-95	9.92E+03	5.52E+03	2.97E+03	0.00E+00	5.45E+03	0.00E+00	3.35E+07
RU-103	1.22E+02	0.00E+00	5.27E+01	0.00E+00	4.67E+02	0.00E+00	1.43E+04
RU-106	2.45E+03	0.00E+00	3.10E+02	0.00E+00	4.73E+03	0.00E+00	1.59E+05
AG-110M	6.99E+06	6.47E+06	3.84E+06	0.00E+00	1.27E+07	0.00E+00	2.64E+09
TE-125M	1.96E+06	7.09E+05	2.62E+05	5.89E+05	7.96E+06	0.00E+00	7.81E+06
TE-127M	5.50E+06	1.97E+06	6.70E+05	1.41E+06	2.23E+07	0.00E+00	1.84E+07
TE-129M	7.23E+06	2.70E+06	1.14E+06	2.48E+06	3.02E+07	0.00E+00	3.64E+07
I-131	3.56E+08	5.09E+08	2.92E+08	1.67E+11	8.73E+08	0.00E+00	1.34E+08
I-133	4.65E+06	8.10E+06	2.47E+06	1.19E+09	1.41E+07	0.00E+00	7.28E+06
CS-134	1.70E+10	4.04E+10	3.30E+10	0.00E+00	1.31E+10	4.34E+09	7.07E+08
CS-136	7.92E+08	3.13E+09	2.25E+09	0.00E+00	1.74E+09	2.38E+08	3.55E+08
CS-137	2.22E+10	3.03E+10	1.99E+10	0.00E+00	1.03E+10	3.42E+09	5.87E+08
BA-140	3.24E+06	4.07E+03	2.12E+05	0.00E+00	1.38E+03	2.33E+03	6.67E+06
CE-141	5.82E+02	3.94E+02	4.47E+01	0.00E+00	1.83E+02	0.00E+00	1.51E+06
CE-144	4.30E+04	1.80E+04	2.31E+03	0.00E+00	1.07E+04	0.00E+00	1.45E+07
PR-143	1.90E+01	7.60E+00	9.40e-01	0.00E+00	4.39E+00	0.00E+00	8.30E+04
ND-147	1.13E+01	1.31E+01	7.82e-01	0.00E+00	7.65E+00	0.00E+00	6.28E+04

TABLE 5.6.1

Pathway Dose Factors, Ri

AGE GROUP: INFANT PATHWAY: GRASS-COW-MEAT

NUCLIDE	ORGAN DOSE FACTORS; m² - mrem/year per μCi/sec						
	BONE	LIVER	T.BODY	THYROID	KIDNEY	LUNG	GI-LLI
H-3	0.00E+00	0.00E+00	0.00E+00	0.00E+00	0.00E+00	0.00E+00	0.00E+00
C-14	0.00E+00	0.00E+00	0.00E+00	0.00E+00	0.00E+00	0.00E+00	0.00E+00
CR-51	0.00E+00	0.00E+00	0.00E+00	0.00E+00	0.00E+00	0.00E+00	0.00E+00
MN-54	0.00E+00	0.00E+00	0.00E+00	0.00E+00	0.00E+00	0.00E+00	0.00E+00
FE-55	0.00E+00	0.00E+00	0.00E+00	0.00E+00	0.00E+00	0.00E+00	0.00E+00
FE-59	0.00E+00	0.00E+00	0.00E+00	0.00E+00	0.00E+00	0.00E+00	0.00E+00
CO-58	0.00E+00	0.00E+00	0.00E+00	0.00E+00	0.00E+00	0.00E+00	0.00E+00
CO-60	0.00E+00	0.00E+00	0.00E+00	0.00E+00	0.00E+00	0.00E+00	0.00E+00
NI-63	0.00E+00	0.00E+00	0.00E+00	0.00E+00	0.00E+00	0.00E+00	0.00E+00
ZN-65	0.00E+00	0.00E+00	0.00E+00	0.00E+00	0.00E+00	0.00E+00	0.00E+00
RB-86	0.00E+00	0.00E+00	0.00E+00	0.00E+00	0.00E+00	0.00E+00	0.00E+00
SR-89	0.00E+00	0.00E+00	0.00E+00	0.00E+00	0.00E+00	0.00E+00	0.00E+00
SR-90	0.00E+00	0.00E+00	0.00E+00	0.00E+00	0.00E+00	0.00E+00	0.00E+00
Y-91	0.00E+00	0.00E+00	0.00E+00	0.00E+00	0.00E+00	0.00E+00	0.00E+00
ZR-95	0.00E+00	0.00E+00	0.00E+00	0.00E+00	0.00E+00	0.00E+00	0.00E+00
NB-95	0.00E+00	0.00E+00	0.00E+00	0.00E+00	0.00E+00	0.00E+00	0.00E+00
RU-103	0.00E+00	0.00E+00	0.00E+00	0.00E+00	0.00E+00	0.00E+00	0.00E+00
RU-106	0.00E+00	0.00E+00	0.00E+00	0.00E+00	0.00E+00	0.00E+00	0.00E+00
AG-110M	0.00E+00	0.00E+00	0.00E+00	0.00E+00	0.00E+00	0.00E+00	0.00E+00
TE-125M	0.00E+00	0.00E+00	0.00E+00	0.00E+00	0.00E+00	0.00E+00	0.00E+00
TE-127M	0.00E+00	0.00E+00	0.00E+00	0.00E+00	0.00E+00	0.00E+00	0.00E+00
TE-129M	0.00E+00	0.00E+00	0.00E+00	0.00E+00	0.00E+00	0.00E+00	0.00E+00
I-131	0.00E+00	0.00E+00	0.00E+00	0.00E+00	0.00E+00	0.00E+00	0.00E+00
I-133	0.00E+00	0.00E+00	0.00E+00	0.00E+00	0.00E+00	0.00E+00	0.00E+00
CS-134	0.00E+00	0.00E+00	0.00E+00	0.00E+00	0.00E+00	0.00E+00	0.00E+00
CS-136	0.00E+00	0.00E+00	0.00E+00	0.00E+00	0.00E+00	0.00E+00	0.00E+00
CS-137	0.00E+00	0.00E+00	0.00E+00	0.00E+00	0.00E+00	0.00E+00	0.00E+00
BA-140	0.00E+00	0.00E+00	0.00E+00	0.00E+00	0.00E+00	0.00E+00	0.00E+00
CE-141	0.00E+00	0.00E+00	0.00E+00	0.00E+00	0.00E+00	0.00E+00	0.00E+00
CE-144	0.00E+00	0.00E+00	0.00E+00	0.00E+00	0.00E+00	0.00E+00	0.00E+00
PR-143	0.00E+00	0.00E+00	0.00E+00	0.00E+00	0.00E+00	0.00E+00	0.00E+00
ND-147	0.00E+00	0.00E+00	0.00E+00	0.00E+00	0.00E+00	0.00E+00	0.00E+00

TABLE 5.6.2

Pathway Dose Factors, Ri

AGE GROUP: CHILD PATHWAY: GRASS-COW-MEAT

NUCLIDE	ORGAN DOSE FACTORS; m² - mrem/year per μCi/sec						
	BONE	LIVER	T.BODY	THYROID	KIDNEY	LUNG	GI-LLI
H-3	0.00E+00	2.34E+02	2.34E+02	2.34E+02	2.34E+02	2.34E+02	2.34E+02
C-14	3.84E+08	7.67E+07	7.67E+07	7.67E+07	7.67E+07	7.67E+07	7.67E+07
CR-51	0.00E+00	0.00E+00	8.78E+03	4.88E+03	1.33E+03	8.90E+03	4.66E+05
MN-54	0.00E+00	8.01E+06	2.13E+06	0.00E+00	2.25E+06	0.00E+00	6.73E+06
FE-55	4.57E+08	2.43E+08	7.52E+07	0.00E+00	0.00E+00	1.37E+08	4.49E+07
FE-59	3.77E+08	6.10E+08	3.04E+08	0.00E+00	0.00E+00	1.77E+08	6.35E+08
CO-58	0.00E+00	1.64E+07	5.03E+07	0.00E+00	0.00E+00	0.00E+00	9.58E+07
CO-60	0.00E+00	6.93E+07	2.04E+08	0.00E+00	0.00E+00	0.00E+00	3.84E+08
NI-63	2.91E+10	1.56E+09	9.91E+08	0.00E+00	0.00E+00	0.00E+00	1.05E+08
ZN-65	3.76E+08	1.00E+09	6.22E+08	0.00E+00	6.31E+08	0.00E+00	1.76E+08
RB-86	0.00E+00	5.76E+08	3.54E+08	0.00E+00	0.00E+00	0.00E+00	3.71E+07
SR-89	4.82E+08	0.00E+00	1.38E+07	0.00E+00	0.00E+00	0.00E+00	1.87E+07
SR-90	1.04E+10	0.00E+00	2.64E+09	0.00E+00	0.00E+00	0.00E+00	1.40E+08
Y-91	1.80E+06	0.00E+00	4.82E+04	0.00E+00	0.00E+00	0.00E+00	2.40E+08
ZR-95	2.66E+06	5.86E+05	5.21E+05	0.00E+00	8.38E+05	0.00E+00	6.11E+08
NB-95	3.10E+06	1.21E+06	8.63E+05	0.00E+00	1.13E+06	0.00E+00	2.23E+09
RU-103	1.55E+08	0.00E+00	5.96E+07	0.00E+00	3.90E+08	0.00E+00	4.01E+09
RU-106	4.44E+09	0.00E+00	5.54E+08	0.00E+00	6.00E+09	0.00E+00	6.91E+10
AG-110M	8.39E+06	5.67E+06	4.53E+06	0.00E+00	1.06E+07	0.00E+00	6.74E+08
TE-125M	5.69E+08	1.54E+08	7.59E+07	1.60E+08	0.00E+00	0.00E+00	5.49E+08
TE-127M	1.78E+09	4.78E+08	2.11E+08	4.25E+08	5.06E+09	0.00E+00	1.44E+09
TE-129M	1.79E+09	5.00E+08	2.78E+08	5.77E+08	5.26E+09	0.00E+00	2.18E+09
I-131	1.66E+07	1.67E+07	9.48E+06	5.52E+09	2.74E+07	0.00E+00	1.48E+06
I-133	5.72e-01	7.08e-01	2.68e-01	1.31E+02	1.18E+00	0.00E+00	2.85e-01
CS-134	9.23E+08	1.51E+09	3.19E+08	0.00E+00	4.69E+08	1.68E+08	8.16E+06
CS-136	1.63E+07	4.48E+07	2.90E+07	0.00E+00	2.39E+07	3.56E+06	1.57E+06
CS-137	1.33E+09	1.28E+09	1.89E+08	0.00E+00	4.16E+08	1.50E+08	8.00E+06
BA-140	4.42E+07	3.67E+04	2.58E+06	0.00E+00	1.26E+04	2.31E+04	2.24E+07
CE-141	2.22E+04	1.11E+04	1.65E+03	0.00E+00	4.86E+03	0.00E+00	1.38E+07
CE-144	2.32E+06	7.26E+05	1.24E+05	0.00E+00	4.02E+05	0.00E+00	1.89E+08
PR-143	3.33E+04	1.00E+04	1.65E+03	0.00E+00	5.42E+03	0.00E+00	3.60E+07
ND-147	1.17E+04	9.48E+03	7.34E+02	0.00E+00	5.20E+03	0.00E+00	1.50E+07

TABLE 5.6.3

Pathway Dose Factors, Ri

AGE GROUP: TEEN PATHWAY: GRASS-COW-MEAT

NUCLIDE	ORGAN DOSE FACTORS; m² - mrem/year per μCi/sec						
	BONE	LIVER	T.BODY	THYROID	KIDNEY	LUNG	GI-LLI
H-3	0.00E+00	1.93E+02	1.93E+02	1.93E+02	1.93E+02	1.93E+02	1.93E+02
C-14	2.04E+08	4.08E+07	4.08E+07	4.08E+07	4.08E+07	4.08E+07	4.08E+07
CR-51	0.00E+00	0.00E+00	5.63E+03	3.13E+03	1.23E+03	8.03E+03	9.46E+05
MN-54	0.00E+00	7.00E+06	1.39E+06	0.00E+00	2.09E+06	0.00E+00	1.44E+07
FE-55	2.38E+08	1.69E+08	3.94E+07	0.00E+00	0.00E+00	1.07E+08	7.31E+07
FE-59	2.12E+08	4.95E+08	1.91E+08	0.00E+00	0.00E+00	1.56E+08	1.17E+09
CO-58	0.00E+00	1.40E+07	3.24E+07	0.00E+00	0.00E+00	0.00E+00	1.94E+08
CO-60	0.00E+00	5.83E+07	1.31E+08	0.00E+00	0.00E+00	0.00E+00	7.60E+08
NI-63	1.52E+10	1.07E+09	5.15E+08	0.00E+00	0.00E+00	0.00E+00	1.71E+08
ZN-65	2.50E+08	8.68E+08	4.05E+08	0.00E+00	5.56E+08	0.00E+00	3.68E+08
RB-86	0.00E+00	4.06E+08	1.91E+08	0.00E+00	0.00E+00	0.00E+00	6.00E+07
SR-89	2.55E+08	0.00E+00	7.29E+06	0.00E+00	0.00E+00	0.00E+00	3.03E+07
SR-90	8.04E+09	0.00E+00	1.99E+09	0.00E+00	0.00E+00	0.00E+00	2.26E+08
Y-91	9.54E+05	0.00E+00	2.56E+04	0.00E+00	0.00E+00	0.00E+00	3.91E+08
ZR-95	1.50E+06	4.73E+05	3.25E+05	0.00E+00	6.95E+05	0.00E+00	1.09E+09
NB-95	1.79E+06	9.95E+05	5.48E+05	0.00E+00	9.64E+05	0.00E+00	4.25E+09
RU-103	8.56E+07	0.00E+00	3.66E+07	0.00E+00	3.02E+08	0.00E+00	7.15E+09
RU-106	2.36E+09	0.00E+00	2.97E+08	0.00E+00	4.54E+09	0.00E+00	1.13E+11
AG-110M	5.06E+06	4.78E+06	2.91E+06	0.00E+00	9.13E+06	0.00E+00	1.34E+09
TE-125M	3.03E+08	1.09E+08	4.05E+07	8.46E+07	0.00E+00	0.00E+00	8.94E+08
TE-127M	9.41E+08	3.34E+08	1.12E+08	2.24E+08	3.81E+09	0.00E+00	2.35E+09
TE-129M	9.49E+08	3.52E+08	1.50E+08	3.06E+08	3.97E+09	0.00E+00	3.56E+09
I-131	8.93E+06	1.25E+07	6.72E+06	3.65E+09	2.15E+07	0.00E+00	2.47E+06
I-133	3.08e-01	5.22e-01	1.59e-01	7.29E+01	9.16e-01	0.00E+00	3.95e-01
CS-134	5.23E+08	1.23E+09	5.71E+08	0.00E+00	3.91E+08	1.49E+08	1.53E+07
CS-136	9.43E+06	3.71E+07	2.49E+07	0.00E+00	2.02E+07	3.18E+06	2.99E+06
CS-137	7.24E+08	9.63E+08	3.35E+08	0.00E+00	3.28E+08	1.27E+08	1.37E+07
BA-140	2.39E+07	2.93E+04	1.54E+06	0.00E+00	9.94E+03	1.97E+04	3.69E+07
CE-141	1.18E+04	7.87E+03	9.05E+02	0.00E+00	3.71E+03	0.00E+00	2.25E+07
CE-144	1.23E+06	5.08E+05	6.60E+04	0.00E+00	3.03E+05	0.00E+00	3.09E+08
PR-143	1.76E+04	7.03E+03	8.76E+02	0.00E+00	4.08E+03	0.00E+00	5.79E+07
ND-147	6.23E+03	6.78E+03	4.06E+02	0.00E+00	3.98E+03	0.00E+00	2.44E+07

TABLE 5.6.4

Pathway Dose Factors, Ri

AGE GROUP: ADULT PATHWAY: GRASS-COW-MEAT

NUCLIDE	ORGAN DOSE FACTORS; m² - mrem/year per μCi/sec						
	BONE	LIVER	T.BODY	THYROID	KIDNEY	LUNG	GI-LLI
H-3	0.00E+00	3.24E+02	3.24E+02	3.24E+02	3.24E+02	3.24E+02	3.24E+02
C-14	2.42E+08	4.83E+07	4.83E+07	4.83E+07	4.83E+07	4.83E+07	4.83E+07
CR-51	0.00E+00	0.00E+00	7.04E+03	4.21E+03	1.55E+03	9.35E+03	1.77E+06
MN-54	0.00E+00	9.18E+06	1.75E+06	0.00E+00	2.73E+06	0.00E+00	2.81E+07
FE-55	2.93E+08	2.03E+08	4.73E+07	0.00E+00	0.00E+00	1.13E+08	1.16E+08
FE-59	2.66E+08	6.25E+08	2.39E+08	0.00E+00	0.00E+00	1.75E+08	2.08E+09
CO-58	0.00E+00	1.82E+07	4.09E+07	0.00E+00	0.00E+00	0.00E+00	3.70E+08
CO-60	0.00E+00	7.52E+07	1.66E+08	0.00E+00	0.00E+00	0.00E+00	1.41E+09
NI-63	1.89E+10	1.31E+09	6.33E+08	0.00E+00	0.00E+00	0.00E+00	2.73E+08
ZN-65	3.56E+08	1.13E+09	5.12E+08	0.00E+00	7.57E+08	0.00E+00	7.13E+08
RB-86	0.00E+00	4.87E+08	2.27E+08	0.00E+00	0.00E+00	0.00E+00	9.59E+07
SR-89	3.02E+08	0.00E+00	8.66E+06	0.00E+00	0.00E+00	0.00E+00	4.84E+07
SR-90	1.24E+10	0.00E+00	3.05E+09	0.00E+00	0.00E+00	0.00E+00	3.60E+08
Y-91	1.13E+06	0.00E+00	3.03E+04	0.00E+00	0.00E+00	0.00E+00	6.24E+08
ZR-95	1.87E+06	6.01E+05	4.07E+05	0.00E+00	9.43E+05	0.00E+00	1.90E+09
NB-95	2.30E+06	1.28E+06	6.87E+05	0.00E+00	1.26E+06	0.00E+00	7.76E+09
RU-103	1.05E+08	0.00E+00	4.53E+07	0.00E+00	4.02E+08	0.00E+00	1.23E+10
RU-106	2.80E+09	0.00E+00	3.54E+08	0.00E+00	5.41E+09	0.00E+00	1.81E+11
AG-110M	6.68E+06	6.18E+06	3.67E+06	0.00E+00	1.22E+07	0.00E+00	2.52E+09
TE-125M	3.59E+08	1.30E+08	4.81E+07	1.08E+08	1.46E+09	0.00E+00	1.43E+09
TE-127M	1.12E+09	3.99E+08	1.36E+08	2.85E+08	4.53E+09	0.00E+00	3.74E+09
TE-129M	1.13E+09	4.23E+08	1.79E+08	3.89E+08	4.73E+09	0.00E+00	5.71E+09
I-131	1.08E+07	1.54E+07	8.82E+06	5.04E+09	2.64E+07	0.00E+00	4.06E+06
I-133	3.68e-01	6.41e-01	1.95e-01	9.42E+01	1.12E+00	0.00E+00	5.76e-01
CS-134	6.58E+08	1.57E+09	1.28E+09	0.00E+00	5.07E+08	1.68E+08	2.74E+07
CS-136	1.21E+07	4.78E+07	3.44E+07	0.00E+00	2.66E+07	3.65E+06	5.43E+06
CS-137	8.72E+08	1.19E+09	7.82E+08	0.00E+00	4.05E+08	1.35E+08	2.31E+07
BA-140	2.90E+07	3.64E+04	1.90E+06	0.00E+00	1.24E+04	2.08E+04	5.96E+07
CE-141	1.41E+04	9.51E+03	1.08E+03	0.00E+00	4.42E+03	0.00E+00	3.64E+07
CE-144	1.46E+06	6.10E+05	7.83E+04	0.00E+00	3.62E+05	0.00E+00	4.93E+08
PR-143	2.09E+04	8.40E+03	1.04E+03	0.00E+00	4.85E+03	0.00E+00	9.17E+07
ND-147	7.08E+03	8.18E+03	4.90E+02	0.00E+00	4.78E+03	0.00E+00	3.93E+07

TABLE 5.7.1

Pathway Dose Factors, Ri

AGE GROUP: INFANT PATHWAY: VEGETATION

NUCLIDE	ORGAN DOSE FACTORS; m² - mrem/year per μCi/sec						
	BONE	LIVER	T.BODY	THYROID	KIDNEY	LUNG	GI-LLI
H-3	0.00E+00	0.00E+00	0.00E+00	0.00E+00	0.00E+00	0.00E+00	0.00E+00
C-14	0.00E+00	0.00E+00	0.00E+00	0.00E+00	0.00E+00	0.00E+00	0.00E+00
CR-51	0.00E+00	0.00E+00	0.00E+00	0.00E+00	0.00E+00	0.00E+00	0.00E+00
MN-54	0.00E+00	0.00E+00	0.00E+00	0.00E+00	0.00E+00	0.00E+00	0.00E+00
FE-55	0.00E+00	0.00E+00	0.00E+00	0.00E+00	0.00E+00	0.00E+00	0.00E+00
FE-59	0.00E+00	0.00E+00	0.00E+00	0.00E+00	0.00E+00	0.00E+00	0.00E+00
CO-58	0.00E+00	0.00E+00	0.00E+00	0.00E+00	0.00E+00	0.00E+00	0.00E+00
CO-60	0.00E+00	0.00E+00	0.00E+00	0.00E+00	0.00E+00	0.00E+00	0.00E+00
NI-63	0.00E+00	0.00E+00	0.00E+00	0.00E+00	0.00E+00	0.00E+00	0.00E+00
ZN-65	0.00E+00	0.00E+00	0.00E+00	0.00E+00	0.00E+00	0.00E+00	0.00E+00
RB-86	0.00E+00	0.00E+00	0.00E+00	0.00E+00	0.00E+00	0.00E+00	0.00E+00
SR-89	0.00E+00	0.00E+00	0.00E+00	0.00E+00	0.00E+00	0.00E+00	0.00E+00
SR-90	0.00E+00	0.00E+00	0.00E+00	0.00E+00	0.00E+00	0.00E+00	0.00E+00
Y-91	0.00E+00	0.00E+00	0.00E+00	0.00E+00	0.00E+00	0.00E+00	0.00E+00
ZR-95	0.00E+00	0.00E+00	0.00E+00	0.00E+00	0.00E+00	0.00E+00	0.00E+00
NB-95	0.00E+00	0.00E+00	0.00E+00	0.00E+00	0.00E+00	0.00E+00	0.00E+00
RU-103	0.00E+00	0.00E+00	0.00E+00	0.00E+00	0.00E+00	0.00E+00	0.00E+00
RU-106	0.00E+00	0.00E+00	0.00E+00	0.00E+00	0.00E+00	0.00E+00	0.00E+00
AG-110M	0.00E+00	0.00E+00	0.00E+00	0.00E+00	0.00E+00	0.00E+00	0.00E+00
TE-125M	0.00E+00	0.00E+00	0.00E+00	0.00E+00	0.00E+00	0.00E+00	0.00E+00
TE-127M	0.00E+00	0.00E+00	0.00E+00	0.00E+00	0.00E+00	0.00E+00	0.00E+00
TE-129M	0.00E+00	0.00E+00	0.00E+00	0.00E+00	0.00E+00	0.00E+00	0.00E+00
I-131	0.00E+00	0.00E+00	0.00E+00	0.00E+00	0.00E+00	0.00E+00	0.00E+00
I-133	0.00E+00	0.00E+00	0.00E+00	0.00E+00	0.00E+00	0.00E+00	0.00E+00
CS-134	0.00E+00	0.00E+00	0.00E+00	0.00E+00	0.00E+00	0.00E+00	0.00E+00
CS-136	0.00E+00	0.00E+00	0.00E+00	0.00E+00	0.00E+00	0.00E+00	0.00E+00
CS-137	0.00E+00	0.00E+00	0.00E+00	0.00E+00	0.00E+00	0.00E+00	0.00E+00
BA-140	0.00E+00	0.00E+00	0.00E+00	0.00E+00	0.00E+00	0.00E+00	0.00E+00
CE-141	0.00E+00	0.00E+00	0.00E+00	0.00E+00	0.00E+00	0.00E+00	0.00E+00
CE-144	0.00E+00	0.00E+00	0.00E+00	0.00E+00	0.00E+00	0.00E+00	0.00E+00
PR-143	0.00E+00	0.00E+00	0.00E+00	0.00E+00	0.00E+00	0.00E+00	0.00E+00
ND-147	0.00E+00	0.00E+00	0.00E+00	0.00E+00	0.00E+00	0.00E+00	0.00E+00

TABLE 5.7.2

Pathway Dose Factors, Ri

AGE GROUP: CHILD PATHWAY: VEGETATION

NUCLIDE	ORGAN DOSE FACTORS; m² - mrem/year per μCi/sec						
	BONE	LIVER	T.BODY	THYROID	KIDNEY	LUNG	GI-LLI
H-3	0.00E+00	4.02E+03	4.02E+03	4.02E+03	4.02E+03	4.02E+03	4.02E+03
C-14	8.89E+08	1.78E+08	1.78E+08	1.78E+08	1.78E+08	1.78E+08	1.78E+08
CR-51	0.00E+00	0.00E+00	1.17E+05	6.49E+04	1.77E+04	1.18E+05	6.20E+06
MN-54	0.00E+00	6.65E+08	1.77E+08	0.00E+00	1.86E+08	0.00E+00	5.58E+08
FE-55	8.01E+08	4.25E+08	1.32E+08	0.00E+00	0.00E+00	2.40E+08	7.87E+07
FE-59	3.98E+08	6.44E+08	3.21E+08	0.00E+00	0.00E+00	1.87E+08	6.71E+08
CO-58	0.00E+00	6.44E+07	1.97E+08	0.00E+00	0.00E+00	0.00E+00	3.76E+08
CO-60	0.00E+00	3.78E+08	1.12E+09	0.00E+00	0.00E+00	0.00E+00	2.10E+09
NI-63	3.95E+10	2.11E+09	1.34E+09	0.00E+00	0.00E+00	0.00E+00	1.42E+08
ZN-65	8.12E+08	2.16E+09	1.35E+09	0.00E+00	1.36E+09	0.00E+00	3.80E+08
RB-86	0.00E+00	4.51E+08	2.77E+08	0.00E+00	0.00E+00	0.00E+00	2.90E+07
SR-89	3.60E+10	0.00E+00	1.03E+09	0.00E+00	0.00E+00	0.00E+00	1.39E+09
SR-90	1.24E+12	0.00E+00	3.15E+11	0.00E+00	0.00E+00	0.00E+00	1.67E+10
Y-91	1.87E+07	0.00E+00	4.99E+05	0.00E+00	0.00E+00	0.00E+00	2.49E+09
ZR-95	3.86E+06	8.48E+05	7.55E+05	0.00E+00	1.21E+06	0.00E+00	8.85E+08
NB-95	4.11E+05	1.60E+05	1.14E+05	0.00E+00	1.50E+05	0.00E+00	2.96E+08
RU-103	1.53E+07	0.00E+00	5.90E+06	0.00E+00	3.86E+07	0.00E+00	3.97E+08
RU-106	7.45E+08	0.00E+00	9.30E+07	0.00E+00	1.01E+09	0.00E+00	1.16E+10
AG-110M	3.21E+07	2.17E+07	1.73E+07	0.00E+00	4.04E+07	0.00E+00	2.58E+09
TE-125M	3.51E+08	9.50E+07	4.67E+07	9.84E+07	0.00E+00	0.00E+00	3.38E+08
TE-127M	1.32E+09	3.56E+08	1.57E+08	3.16E+08	3.77E+09	0.00E+00	1.07E+09
TE-129M	8.40E+08	2.35E+08	1.30E+08	2.71E+08	2.47E+09	0.00E+00	1.02E+09
I-131	1.43E+08	1.44E+08	8.18E+07	4.76E+10	2.36E+08	0.00E+00	1.28E+07
I-133	3.53E+06	4.37E+06	1.65E+06	8.12E+08	7.28E+06	0.00E+00	1.76E+06
CS-134	1.60E+10	2.63E+10	5.55E+09	0.00E+00	8.15E+09	2.93E+09	1.42E+08
CS-136	8.28E+07	2.28E+08	1.47E+08	0.00E+00	1.21E+08	1.81E+07	8.00E+06
CS-137	2.39E+10	2.29E+10	3.38E+09	0.00E+00	7.46E+09	2.68E+09	1.43E+08
BA-140	2.79E+08	2.44E+05	1.63E+07	0.00E+00	7.96E+04	1.46E+05	1.41E+08
CE-141	6.57E+05	3.28E+05	4.86E+04	0.00E+00	1.44E+05	0.00E+00	4.09E+08
CE-144	1.27E+08	3.99E+07	6.79E+06	0.00E+00	2.21E+07	0.00E+00	1.04E+10
PR-143	1.45E+05	4.36E+04	7.21E+03	0.00E+00	2.36E+04	0.00E+00	1.57E+08
ND-147	7.15E+04	5.79E+04	4.49E+03	0.00E+00	3.18E+04	0.00E+00	9.18E+07

TABLE 5.7.3

Pathway Dose Factors, Ri

AGE GROUP: TEEN PATHWAY: VEGETATION

NUCLIDE	ORGAN DOSE FACTORS; m² - mrem/year per μCi/sec						
	BONE	LIVER	T.BODY	THYROID	KIDNEY	LUNG	GI-LLI
H-3	0.00E+00	2.59E+03	2.59E+03	2.59E+03	2.59E+03	2.59E+03	2.59E+03
C-14	3.69E+08	7.38E+07	7.38E+07	7.38E+07	7.38E+07	7.38E+07	7.38E+07
CR-51	0.00E+00	0.00E+00	6.16E+04	3.42E+04	1.35E+04	8.79E+04	1.03E+07
MN-54	0.00E+00	4.54E+08	9.01E+07	0.00E+00	1.36E+08	0.00E+00	9.32E+08
FE-55	3.26E+08	2.31E+08	5.39E+07	0.00E+00	0.00E+00	1.47E+08	1.00E+08
FE-59	1.80E+08	4.19E+08	1.62E+08	0.00E+00	0.00E+00	1.32E+08	9.91E+08
CO-58	0.00E+00	4.36E+07	1.01E+08	0.00E+00	0.00E+00	0.00E+00	6.01E+08
CO-60	0.00E+00	2.49E+08	5.60E+08	0.00E+00	0.00E+00	0.00E+00	3.24E+09
NI-63	1.61E+10	1.13E+09	5.45E+08	0.00E+00	0.00E+00	0.00E+00	1.81E+08
ZN-65	4.24E+08	1.47E+09	6.86E+08	0.00E+00	9.42E+08	0.00E+00	6.23E+08
RB-86	0.00E+00	2.73E+08	1.28E+08	0.00E+00	0.00E+00	0.00E+00	4.04E+07
SR-89	1.52E+10	0.00E+00	4.34E+08	0.00E+00	0.00E+00	0.00E+00	1.80E+09
SR-90	7.51E+11	0.00E+00	1.85E+11	0.00E+00	0.00E+00	0.00E+00	2.11E+10
Y-91	7.84E+06	0.00E+00	2.10E+05	0.00E+00	0.00E+00	0.00E+00	3.22E+09
ZR-95	1.72E+06	5.43E+05	3.73E+05	0.00E+00	7.98E+05	0.00E+00	1.25E+09
NB-95	1.92E+05	1.07E+05	5.87E+04	0.00E+00	1.03E+05	0.00E+00	4.56E+08
RU-103	6.82E+06	0.00E+00	2.92E+06	0.00E+00	2.41E+07	0.00E+00	5.70E+08
RU-106	3.09E+08	0.00E+00	3.90E+07	0.00E+00	5.97E+08	0.00E+00	1.48E+10
AG-110M	1.52E+07	1.43E+07	8.72E+06	0.00E+00	2.74E+07	0.00E+00	4.03E+09
TE-125M	1.48E+08	5.34E+07	1.98E+07	4.14E+07	0.00E+00	0.00E+00	4.37E+08
TE-127M	5.52E+08	1.96E+08	6.56E+07	1.31E+08	2.24E+09	0.00E+00	1.37E+09
TE-129M	3.61E+08	1.34E+08	5.72E+07	1.17E+08	1.51E+09	0.00E+00	1.36E+09
I-131	7.69E+07	1.08E+08	5.78E+07	3.14E+10	1.85E+08	0.00E+00	2.13E+07
I-133	1.94E+06	3.29E+06	1.00E+06	4.59E+08	5.77E+06	0.00E+00	2.49E+06
CS-134	7.10E+09	1.67E+10	7.75E+09	0.00E+00	5.31E+09	2.03E+09	2.08E+08
CS-136	4.39E+07	1.73E+08	1.16E+08	0.00E+00	9.41E+07	1.48E+07	1.39E+07
CS-137	1.01E+10	1.35E+10	4.69E+09	0.00E+00	4.59E+09	1.78E+09	1.92E+08
BA-140	1.39E+08	1.71E+05	8.97E+06	0.00E+00	5.78E+04	1.15E+05	2.15E+08
CE-141	2.83E+05	1.89E+05	2.17E+04	0.00E+00	8.90E+04	0.00E+00	5.41E+08
CE-144	5.28E+07	2.18E+07	2.83E+06	0.00E+00	1.30E+07	0.00E+00	1.33E+10
PR-143	6.99E+04	2.79E+04	3.48E+03	0.00E+00	1.62E+04	0.00E+00	2.30E+08
ND-147	3.62E+04	3.94E+04	2.36E+03	0.00E+00	2.31E+04	0.00E+00	1.42E+08

TABLE 5.7.4

Pathway Dose Factors, Ri

AGE GROUP: ADULT PATHWAY: VEGETATION

NUCLIDE	ORGAN DOSE FACTORS; m² - mrem/year per μCi/sec						
	BONE	LIVER	T.BODY	THYROID	KIDNEY	LUNG	GI-LLI
H-3	0.00E+00	2.26E+03	2.26E+03	2.26E+03	2.26E+03	2.26E+03	2.26E+03
C-14	2.28E+08	4.55E+07	4.55E+07	4.55E+07	4.55E+07	4.55E+07	4.55E+07
CR-51	0.00E+00	0.00E+00	4.64E+04	2.77E+04	1.02E+04	6.15E+04	1.17E+07
MN-54	0.00E+00	3.13E+08	5.97E+07	0.00E+00	9.31E+07	0.00E+00	9.58E+08
FE-55	2.10E+08	1.45E+08	3.38E+07	0.00E+00	0.00E+00	8.08E+07	8.31E+07
FE-59	1.26E+08	2.97E+08	1.14E+08	0.00E+00	0.00E+00	8.29E+07	9.89E+08
CO-58	0.00E+00	3.07E+07	6.89E+07	0.00E+00	0.00E+00	0.00E+00	6.23E+08
CO-60	0.00E+00	1.67E+08	3.69E+08	0.00E+00	0.00E+00	0.00E+00	3.14E+09
NI-63	1.04E+10	7.21E+08	3.49E+08	0.00E+00	0.00E+00	0.00E+00	1.50E+08
ZN-65	3.17E+08	1.01E+09	4.56E+08	0.00E+00	6.75E+08	0.00E+00	6.36E+08
RB-86	0.00E+00	2.19E+08	1.02E+08	0.00E+00	0.00E+00	0.00E+00	4.32E+07
SR-89	9.98E+09	0.00E+00	2.86E+08	0.00E+00	0.00E+00	0.00E+00	1.60E+09
SR-90	6.05E+11	0.00E+00	1.48E+11	0.00E+00	0.00E+00	0.00E+00	1.75E+10
Y-91	5.12E+06	0.00E+00	1.37E+05	0.00E+00	0.00E+00	0.00E+00	2.82E+09
ZR-95	1.17E+06	3.77E+05	2.55E+05	0.00E+00	5.91E+05	0.00E+00	1.19E+09
NB-95	1.42E+05	7.92E+04	4.26E+04	0.00E+00	7.83E+04	0.00E+00	4.81E+08
RU-103	4.77E+06	0.00E+00	2.06E+06	0.00E+00	1.82E+07	0.00E+00	5.57E+08
RU-106	1.93E+08	0.00E+00	2.44E+07	0.00E+00	3.72E+08	0.00E+00	1.25E+10
AG-110M	1.05E+07	9.75E+06	5.79E+06	0.00E+00	1.92E+07	0.00E+00	3.98E+09
TE-125M	9.66E+07	3.50E+07	1.29E+07	2.90E+07	3.93E+08	0.00E+00	3.86E+08
TE-127M	3.49E+08	1.25E+08	4.26E+07	8.93E+07	1.42E+09	0.00E+00	1.17E+09
TE-129M	2.51E+08	9.37E+07	3.97E+07	8.63E+07	1.05E+09	0.00E+00	1.26E+09
I-131	8.08E+07	1.16E+08	6.62E+07	3.79E+10	1.98E+08	0.00E+00	3.05E+07
I-133	2.09E+06	3.63E+06	1.11E+06	5.34E+08	6.33E+06	0.00E+00	3.26E+06
CS-134	4.67E+09	1.11E+10	9.08E+09	0.00E+00	3.59E+09	1.19E+09	1.94E+08
CS-136	4.28E+07	1.69E+08	1.22E+08	0.00E+00	9.41E+07	1.29E+07	1.92E+07
CS-137	6.36E+09	8.70E+09	5.70E+09	0.00E+00	2.95E+09	9.81E+08	1.68E+08
BA-140	1.29E+08	1.62E+05	8.47E+06	0.00E+00	5.52E+04	9.29E+04	2.66E+08
CE-141	1.97E+05	1.33E+05	1.51E+04	0.00E+00	6.20E+04	0.00E+00	5.10E+08
CE-144	3.29E+07	1.38E+07	1.77E+06	0.00E+00	8.16E+06	0.00E+00	1.11E+10
PR-143	6.25E+04	2.51E+04	3.10E+03	0.00E+00	1.45E+04	0.00E+00	2.74E+08
ND-147	3.34E+04	3.85E+04	2.31E+03	0.00E+00	2.25E+04	0.00E+00	1.85E+08

6.0 TMI-1 GASEOUS WASTE TREATMENT SYSTEM

6.1 Description of the TMI-1 Gaseous Radwaste Treatment System (see Figure 6.1)

6.1.1 Waste Gas System

a. Reactor Building:

- Reactor Coolant Drain Tank (RCDT) header

b. Auxiliary Building:

- Vent Header from
  1. Miscellaneous Waste Storage Tank (MWST)
  2. Three (3) Reactor Coolant Bleed Tanks (RCBT)
- Waste Gas Delay Tank
- Two (2) Waste Gas Compressors
- Three (3) Waste Gas Decay Tanks (WGDT)

c. Filtration and dilution provided by the Station Ventilation System.

6.2 Operability

Operability of the Gaseous Waste Treatment System is defined as the ability to remove gas from the vent header/tank gas spaces and store it under a higher pressure in the Waste Gas Decay Tanks for subsequent release.

Except for initiating the make up tank sample and waste gas venting and the recycle or disposal of compressed waste gases stored in the waste gas decay tanks, the operation of the waste gas system is entirely automatic. One waste gas compressor comes on automatically, removing gases from the vent header system as required, to maintain the pressure in the system at a maximum of about 16.4 psia.

FIGURE 6.1

Waste Gas System

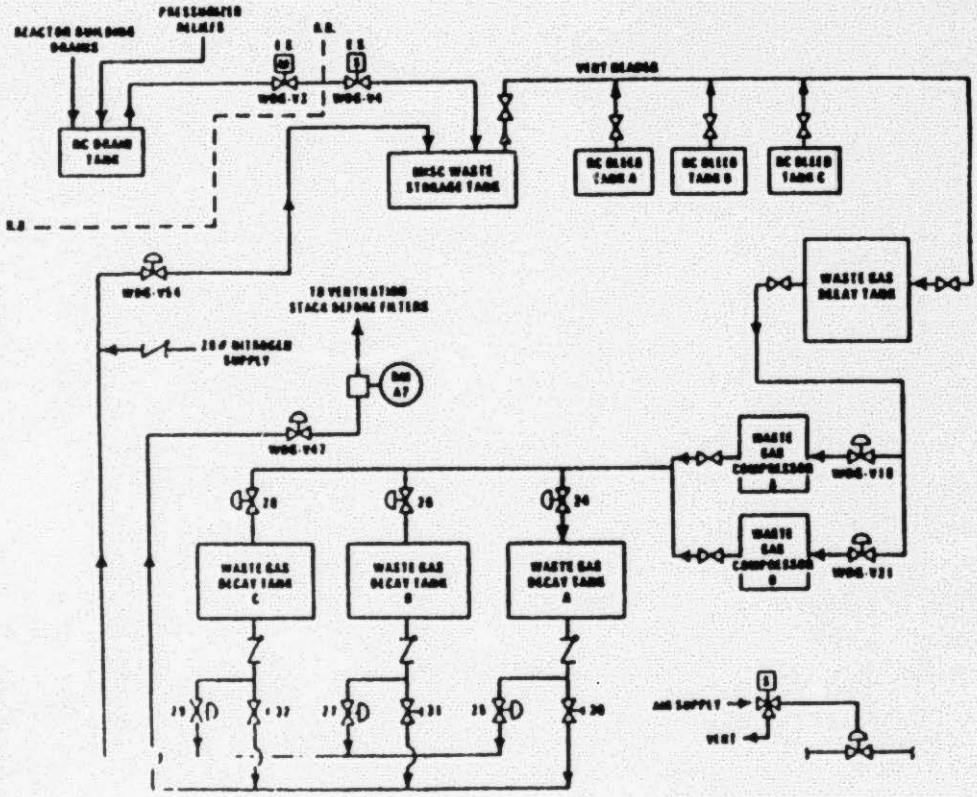

7.0 EFFLUENT TOTAL DOSE ASSESSMENT

7.1 Total Dose Calculation

The annual (calendar year) dose or dose committment to any member of the public, due to releases of radioactivity and to radiation from uranium fuel cycle sources shall be limited to less than or equal to 25 mrem to the total body or any organ except the thyroid, which shall be limited to less than or equal to 75 mrem. This control is provided in order to meet the dose limitations of 40 CFR 190.

The total dose from TMI-1 and TMI-2 (uranium fuel cycle facilities within 8 kilometers) is calculated by summing the calculated annual doses to critical organs of a real individual for liquid effluent using Section 2.1 methodology, for gaseous effluent using Section 5.2.1 and 5.2.2 methodology, and the direct radiation from the site from the environmental monitoring program's direct radiation (TLD) monitors.

8.0 TMINS RADIOLOGICAL ENVIRONMENTAL MONITORING PROGRAM (REMP)

8.1 Monitoring Program Requirements

8.1.1 Controls

In accordance with the TMI-1 Tech. Specs. and TMI-2 PDMS Tech. Specs., the radiological environmental monitoring program shall be conducted as specified in Table 8.1.

8.1.2 Applicability

At all times.

8.1.3 Action

a. With the radiological environmental monitoring program not being conducted as specified in Table 8.1, prepare and submit to the Commission in the Annual Radiological Environmental Operating Report, a description of the reasons for not conducting the program as required and the plans for preventing a recurrence.

b. With the level of radioactivity as the result of plant effluents in an environmental sampling medium exceeding the reporting levels of Table 8.2 when averaged over any calendar quarter, prepare and submit to the Commission within 30 days from the end of the affected calendar quarter, a special report that identifies the cause(s) for exceeding the limit(s) and defines the corrective actions to be taken to reduce radioactive effluents so that the potential annual dose* to a member of the public is less than the calendar year limits of TMI-1 Tech. Spec. Sections 3.22.1.2, 3.22.2.2, 3.22.2.3 and ODCM Part II, Sections 2.1.1.3F, 2.1.2.3D, and 2.1.2.3E. When more than one of the radionuclides in Table 8.2 are detected as the result of plant effluents in the sampling medium, this report shall be submitted if:

$$\frac{\text{concentration (1)}}{\text{reporting level (1)}} + \frac{\text{concentration (2)}}{\text{reporting level (2)}} + \ldots \geq 1.0$$

When radionuclides other than those in Table 8.2 are detected and are the result of plant effluents, this report shall be submitted if the potential annual dose* to a member of the public is equal to or greater than the calendar year limits of TMI-1 Tech. Spec. Sections 3.22.1.2, 3.22.2.2, 3.22.2.3 and ODCM Part II, Sections 2.1.1.3F, 2.1.2.3D, and 2.1.2.3E. This report is not required if the measured level of radioactivity was not the result of plant effluents; however, in such an event, the condition shall be reported and described in the Annual Radiological Environmental Operating Report.

---

* The methodology and parameters used to estimate the potential annual dose to a member of the public shall be indicated in this report.

c. With milk or fresh leafy vegetation samples unavailable from one or more of the sample locations required by Table 8.1, identify specific locations for obtaining replacement samples and add them within 30 days to the Radiological Environmental Monitoring Program given in the ODCM. The specific locations from which samples were unavailable may then be deleted from the monitoring program. Pursuant to TMI-1 Tech. Spec. 6.14 and TMI-2 PDMS Tech. Spec. 6.12, submit in the next Annual Radioactive Effluent Release Report documentation for a change in the ODCM including a revised figure(s) and table for the ODCM reflecting the new location(s) with supporting information identifying the cause of the unavailability of samples and justifying the selection of the new location(s) for obtaining samples.

8.1.4 Bases

The radiological monitoring program required by this control provides representative measurements of radiation and of radioactive materials in those exposure pathways and for those radionuclides which lead to the highest potential radiation exposures of members of the general public resulting from the station operation. This monitoring program implements Section IV B.2 of Appendix I to 10CFR50 and thereby supplements the radiological effluent monitoring program by verifying that the measurable concentrations of radioactive materials and levels of radiation are not higher than expected on the basis of the effluent measurements and modeling of the environmental exposure pathways. Guidance for this monitoring is provided by the Radiological Assessment Branch Technical Position on Environmental Monitoring (Revision 1, November 1979). Program changes may be initiated based on operational experience.

8.1.5 Surveillance Requirements

The radiological environmental monitoring samples shall be collected pursuant to Table 8.1, from the specific locations given in Tables 8.4 through 8.10 and Maps 8.1 through 8.3, and shall be analyzed pursuant to the requirements of Table 8.1 and the detection capabilities required by Table 8.3.

8.2 Land Use Census

8.2.1 Controls

In accordance with the TMI-1 Tech. Specs. and TMI-2 PDMS Tech. Specs., a Land Use Census shall be conducted and shall identify within a distance of 8 km (5 miles) the location in each of the 16 meteorological sectors of the nearest milk animal, the nearest residence, and the nearest garden* of greater than 50 m^2 (500 ft^2) producing broad leaf vegetation.

8.2.2 Applicability

At all times.

8.2.3 Action

a. With a Land Use Census identifying a location(s) that yields a calculated dose or dose commitment greater than the values currently being calculated in TMI-1 Tech. Spec. 4.22.2.3, pursuant to ODCM, Part III, Section 2.0, identify the new location(s) in the next Annual Radioactive Effluent Release Report.

b. With a Land Use Census identifying a location(s) that yields a calculated dose or dose commitment (via the same exposure pathway) 20% greater than at a location from which samples are currently being obtained in accordance with Table 8.1, add the new location(s) within 30 days to the Radiological Environmental Monitoring Program given in the ODCM. The sampling location(s), excluding the control station location, having the lowest calculated dose or dose commitment(s), via the same exposure pathway, may be deleted from this monitoring program after October 31 of the year in which this Land Use Census was conducted. Pursuant to TMI-1 Tech. Spec. 6.14 and TMI-2 PDMS Tech. Spec. 6.12, submit in the next Annual Radioactive Effluent Release Report documentation for a change in the ODCM including a revised figure(s) and table(s) for the ODCM reflecting the new location(s) with information supporting the change in sampling locations.

8.2.4 Bases

This Control is provided to ensure that changes in the use of unrestricted areas are identified and modifications to the monitoring program are made if required by the results of this census. The best information from the door-to-door survey, aerial surveys, or consulting with local agricultural authorities shall be used. This census satisfies the requirements of Section IV.B.3 of Appendix I to 10 CFR 50. Restricting the census to gardens of greater than 500 square feet (50 m^2) provides assurance that significant exposure pathways via leafy vegetables will be identified and monitored since a garden of this size is the minimum required to produce the quantity (26 kg/yr) of leafy vegetables assumed in Regulatory Guide 1.109 for consumption by a child. To determine this minimum garden size, the following assumptions were used: 1) that 20% of the garden was used for growing broad leaf vegetation (i.e., similar to lettuce and cabbage), and 2) a vegetation yield of 2 kg/square meter.

---

* Broad leaf vegetation sampling of at least three different kinds of vegetation may be performed at the site boundary in each of two different sectors with the highest predicted D/Qs in lieu of the garden census. Requirements for broad leaf sampling in Table 8.1 shall be followed, including analysis of control samples.

8.2.5 Surveillance Requirements

The Land Use Census shall be conducted during the growing season at least once per 12 months, using that information that will provide the best results, such as by a door-to-door survey, aerial survey, or by consulting local agricultural authorities. The results of the Land Use Census shall be included in the Annual Radiological Environmental Operating Report pursuant to ODCM, Part III, Section 1.0.

8.3 Interlaboratory Comparison Program

8.3.1 Controls

In accordance with the TMI-1 Tech. Specs. and TMI-2 PDMS Tech. Specs., analyses shall be performed on radioactive materials supplied as part of an Interlaboratory Comparison Program which has been approved by the Commission (NRC). Only those samples and analyses which are required by Table 8.1 shall be performed.

8.3.2 Applicability

At all times.

8.3.3 Action

With analysis not being performed as required above, report the corrective action taken to prevent a recurrence to the Commission in the Annual Radiological Environmental Operating Report.

8.3.4 Bases

The requirement for participation in an approved Interlaboratory Comparison Program is provided to ensure that independent checks on precision and accuracy of the measurements of radioactive material in environmental sample matrices are performed as part of a quality assurance program for environmental monitoring in order to demonstrate that the results are reasonably valid for the purpose of Section IV, B.2 of Appendix I to 10 CFR 50.

8.3.5 Surveillance Requirements

A summary of the Interlaboratory Comparison Program results shall be included in the Annual Radiological Environmental Operating Report.

TABLE 8.1

Sample Collection and Analysis Requirements

Exposure Pathway and/or Sample	Number of Samples and Sample Locations[a]	Sampling and Collection Frequency[b]	Type and Frequency of Analysis[b]
1. Airborne			
Radioiodine and Particulates	Samples from 5 locations from Table 8.4.	Continuous sampler operation with sample collection weekly, or more frequently if required by dust loading.	Radiolodine Canister: Analyze weekly for I-131. Particulate Filter: Analyze for gross beta radioactivity following filter change[d]. Perform gamma isotopic analysis[e] on composite (by location) sample quarterly.
2. Direct Radiation[c]	Samples from 40 locations from Table 8.5 (using either 2 dosimeters or at least 1 instrument for continuously measuring and recording dose rate at each location).	Sample Quarterly	Analyze for gamma dose quarterly.

TABLE 8.1 (Cont'd)

Sample Collection and Analysis Requirements

Exposure Pathway and/or Sample	Number of Samples and Sample Locations[a]	Sampling and Collection Frequency[b]	Type and Frequency of Analysis[b]
3. Waterborne			
a. Surface[i]	Samples from 2 locations from Table 8.6. • 1 sample from downstream (indicator) location • 1 sample from upstream (control) location (or location not influenced by the station discharge)	Composite[g] sample over 1 monthly period.	Perform gamma isotopic analysis[e] monthly. Composite for tritium analysis quarterly.
b. Drinking	Samples from 2 locations from Table 8.6. • 1 sample at the location of the nearest water supply that could be affected by the station discharge. • 1 sample from a control location.	Composite[g] sample over 1 monthly period.	Perform gross beta and gamma isotopic analysis[e] monthly. Perform Sr-90 analysis if gross beta of monthly composite >10 times control. Composite for tritium analysis quarterly.
c. Sediment from Shoreline	Samples from 2 locations (1 Control and 1 Indicator) from Table 8.7.	Sample twice per year (Spring and Fall), the interval not to exceed 184 days.	Perform gamma isotopic analysis[e] on each sample.

TABLE 8.1 (Cont'd)

Sample Collection and Analysis Requirements

Exposure Pathway and/or Sample	Number of Samples and Sample Locations[a]	Sampling and Collection Frequency[b]	Type and Frequency of Analysis[b]
4. Ingestion			
a. Milk	Samples from 4 locations from Table 8.8.	Sample semimonthly when animals are on pasture; monthly at other times.	Perform gamma isotopic analysis[e] and I-131 analysis on each sample. Composite for Sr-90 analysis quarterly.
b. Fish	Samples from 2 locations from Table 8.9. • 1 sample of recreationally important bottom feeders and 1 sample of recreationally important predators in the vicinity of the station discharge. • 1 sample of recreationally important bottom feeders and 1 sample of recreationally important predators from an area not influenced by the station discharge.	Sample twice per year (Spring and Fall), the interval not to exceed 184 days.	Perform gamma isotopic[e] and Sr-90 analysis on edible portions.

TABLE 8.1 (Cont'd)

Sample Collection and Analysis Requirements

Exposure Pathway and/or Sample	Number of Samples and Sample Locations[a]	Sampling and Collection Frequency[b]	Type and Frequency of Analysis[b]
c. Food Products	Samples from 2 locations from Table 8.10 (when available) • 1 sample of green leafy vegetables or leafy vegetation at a location in the immediate vicinity of the station. (indicator) • 1 sample of same species or group from a location not influenced by the station discharge.	Sample at time of harvest.	Perform gamma isotopic[c], I-131, and Sr-90 analysis on edible portions.
	Samples from 4 locations (3 indicator and 1 control) from Table 8.10 (when available).	Sample fruits and vegetables at time of harvest.	Perform gamma isotopic analysis[c] on edible portions.

TABLE 8.1 (Cont'd)

Sample Collection and Analysis Requirements

Table Notation

a. Sampling locations are provided in Tables 8.4 through 8.10. They are depicted in Maps 8.1 through 8.3. Deviations are permitted from the required sampling schedule if specimens are unobtainable due to hazardous conditions, seasonal unavailability, malfunction of automatic sampling equipment and other legitimate reasons. All deviations from the sampling schedule shall be explained in the Annual Radiological Environmental Operating Report.

b. Frequency notation: weekly (7 days), semimonthly (15 days), monthly (31 days), and quarterly (92 days). All surveillance requirements shall be performed within the specified time interval with a maximum allowable extension not to exceed 25% of the surveillance interval. A total maximum combined interval time for any 4 consecutive tests shall not exceed 3.25 times the specified collection or analysis interval.

c. One or more instruments, such as a pressurized ion chamber for measuring and recording dose rate continuously, may be used in place of, or in addition to, integrating dosimeters. For the purpose of this table, a thermoluminescent dosimeter (TLD) is considered to be one phosphor; two or more phosphors in a packet are considered as two or more dosimeters. Film badges shall not be used as dosimeters for measuring direct radiation.

d. Airborne particulate sample filters shall be analyzed for gross beta radioactivity 24 hours or more after sampling to allow for radon and thoron daughter decay. If gross beta activity in an air particulate sample(s) is greater than ten times the calendar year mean of control samples, Sr-90 and gamma isotopic analysis shall be performed on the individual sample(s).

e. Gamma isotopic analysis means the identification and quantification of gamma-emitting radionuclides that may be attributable to the effluents from the facility.

f. The "upstream sample" shall be taken at a distance beyond significant influence of the discharge. The "downstream sample" shall be taken in an area beyond but near the mixing zone.

g. Composite sample aliquots shall be collected at time intervals that are short (e.g., hourly) relative to the compositing period (e.g., monthly) in order to assure obtaining a representative sample.

TABLE 8.2

Reporting Levels for Radioactivity Concentrations in Environmental Samples

Analysis	Water (pCi/L)	Airborne Particulate or gas (pCi/m^3)	Fish (pCi/kg,wet)	Milk (pCi/L)	Food Products (pCi/kg, wet)
H-3	20,000[a]				
Mn-54	1000		30,000		
Fe-59	400		10,000		
Co-58	1000		30,000		
Co-60	300		10,000		
Zn-65	300		20,000		
Sr-90	8	0.1	100	8	100
Zr-Nb-95	400				
I-131	2	0.9		3	100
Cs-134	30	10	1000	60	1000
Cs-137	50	20	2000	70	2000
Ba-La-140	200			300	

[a]For drinking water samples. This is 40 CFR Part 141 value.

TABLE 8.3

Detection Capabilities for Environmental Sample Analysis[a]

Lower Limit of Detection (lld)[b,c]

Analysis	Water (pCi/L)	Airborne Particulate or Gas (pCi/m^3)	Fish (pCi/kg, wet)	Milk (pCi/L)	Food Products (pCi/kg,wet)	Sediment (pCi/kg, dry)
Gross Beta	4	0.01				
H-3	2000					
Mn-54	15		130			
Fe-59	30		260			
Co-58, 60	15		130			
Zn-65	30		260			
Zr-95	30					
Sr-90	2	0.01	10	2	10	
Nb-95	15					
I-131	1[d]	0.07		1	60	
Cs-134	15	0.05	130	15	60	150
Cs-137	18	0.06	150	18	80	180
Ba-140	60			60		
La-140	15			15		

TABLE 8.3 (Cont'd)

Detection Capabilities for Environmental Sample Analysis[a]
Table Notation

a. This list does not mean that only these nuclides are to be considered. Other peaks that are identifiable, which may be related to plant operations, together with those of the above nuclides, shall also be analyzed and reported in the Annual Radiological Environmental Operating Report.

b. Required detection capabilities for thermoluminescent dosimeters used for environmental measurements are given in Regulatory Guide 4.13 (Rev. 1).

c. The LLD is defined, for purposes of these controls, as the smallest concentration of radioactive material in a sample that will yield a net count, above system background, that will be detected with 95% probability with only 5% probability of falsely concluding that a blank observation represents a "real" signal.

For a particular measurement system (which may include radiochemical separation):

$$LLD = \frac{4.66\ S_b}{E \cdot V \cdot 2.22 \cdot Y \cdot \exp\ (-\lambda \Delta t)}$$

Where:

LLD is the "a priori" lower limit of detection as defined above, as picocuries per unit mass or volume.

s_b is the standard deviation of the background counting rate or of the counting rate of a blank sample as appropriate, as counts per minute,

E is the counting efficiency, as counts per disintegration,

V is the sample size in units of mass or volume,

2.22 is the number of disintegrations per minute per picocurie,

Y is the fractional radiochemical yield (when applicable),

λ is the radioactive decay constant for the particular radionuclide and

Δt for environmental samples is the elapsed time between sample collection, or end of the sample collection period, and time of counting.

Typical values of E, V, Y and Δt should be used in the calculation.

It should be recognized that the LLD is defined as an "a priori" (before the fact) limit representing the capability of a measurement system and not as an "a posteriori" (after the fact) limit for a particular measurement. Analyses shall be performed in such a manner that the stated LLDs will be achieved under routine conditions. Occasionally background fluctuations, unavoidable small samples sizes, the presence of interfering nuclides, or other uncontrollable circumstances may render these LLDs unachievable. In such cases, the contributing factors shall be identified and described in the Annual Radiological Environmental Operating Report.

d. LLD for drinking water.

TABLE 8.4

TMINS REMP Station Locations-Air Particulate and Air Iodine

Station Code	Distance (miles)	Azimuth (°)	Map No.
B1-4	0.8	28	60
E1-2	0.4	95	2
F1-3	0.6	105	70
G2-1	1.4	125	75
M2-1	1.3	253	3
A3-1	2.6	358	4
H3-1	2.3	159	5
J3-2	2.9	181	71
Q4-1	3.5	325	92
G10-1	9.8	127	6
J15-1	12.6	180	7
Q15-1	13.5	305	8

TABLE 8.5

TMINS REMP STATION Locations-Direct Radiation (TLD)

Station Code	Distance (miles)	Azimuth (°)	Map No.
A1-1	0.4	0	1
A1-4	0.3	5	9
B1-1	0.6	25	10
B1-2	0.4	26	11
B1-3	0.5	15	12
C1-2	0.3	54	13
D1-1	0.2	74	14
E1-1	0.2	95	15
E1-2	0.4	95	2
E1-4	0.2	98	16
F1-2	0.2	109	17
G1-3	0.3	129	18
H1-1	0.5	167	19
H1-9	0.3	167	20
J1-1	0.8	184	21
J1-3	0.3	189	22
J1-4	0.4	188	23
K1-4	0.2	208	24
K1-5	0.2	202	25
L1-1	0.1	235	26
M1-1	0.1	249	27
N1-3	0.1	270	28
P1-1	0.4	293	29
P1-2	0.2	290	30

TABLE 8.5 (Cont'd)

TMINS REMP STATION Locations-Direct Radiation (TLD)

Station Code	Distance (miles)	Azimuth (°)	Map No
Q1-2	0.2	318	31
R1-1	0.2	335	32
C2-1	1.6	48	33
K2-1	1.1	200	34
M2-1	1.3	253	3
A3-1	2.6	358	4
H3-1	2.3	159	5
R3-1	2.6	338	35
B5-1	4.8	18	36
C5-1	4.5	42	37
E5-1	4.6	81	38
F5-1	4.7	107	39
G5-1	4.8	131	40
H5-1	4.1	157	41
J5-1	4.9	182	42
K5-1	5.0	200	43
L5-1	4.1	228	44
M5-1	4.3	249	45
N5-1	4.9	268	46
P5-1	4.9	285	47
Q5-1	5.0	318	48
R5-1	4.9	339	49
D6-1	5.2	65	50
E7-1	6.8	86	51
[illegible]9-1	8.5	308	52
B10-1	9.4	21	53
G10-1	9.8	127	6
G15-1	14.4	124	54
J15-1	12.6	180	7
Q15-1	13.5	305	8
R15-2	12.4	329	55

TABLE 8.6

TMINS REMP Station Locations-Surface Water

Station Code	Distance (miles)	Azimuth (°)	Map No.
P1-3 (R)	0.1	284	56
J1-2 (R)	0.5	188	57
J2-1 (R)	1.5	182	58
A3-2 (R)	2.5	355	59
H5-2 (F)	4.2	157	61
Q9-1 (F)	8.5	308	52
G15-1 (F)	14.4	124	54
G15-2 (F)	13.6	128	62
G15-3 (F)	14.8	124	63
J15-2 (F)	14.7	178	64
F15-1 (R)	12.6	122	65

(R) = Raw Water
(F) = Finished Water

TABLE 8.7

TMINS REMP Station Locations-Aquatic Sediment

Station Code	Distance (miles)	Azimuth (°)	Map No.
A1-2	0.8	6	66
A1-3	0.5	0	67
G1-1	0.3	137	68
K1-3	0.3	202	69
J2-1	1.5	182	58

TABLE 8.8

TMINS REMP Station Locations-Milk

Station Code	Distance (miles)	Azimuth (°)	Map No.
A2-1 (MG)	1.2	5	72
A15-2 (MG)	14.2	9	73
D2-1 (M)	1.1	65	74
G2-1 (M)	1.4	125	75
P7-1 (M)	6.7	293	76
K15-2 (M)	12.8	208	77
F3-1 (M)	2.3	104	78
E2-2 (M)	1.1	93	79
A4-1 (M)	3.3	10	93

(MG) = Goat Milk
(M) = Cow Milk

TABLE 8.9

TMINS REMP Station Locations-Fish

Station Code	Station Location
TM-AQF-IND	Downstream of Station Discharge
TM-AQF-BKG	Upstream of Station Discharge

AQF = Fish

TABLE 8.10

TMINS REMP Station Locations-Food Products

Station Code	Distance (miles)	Azimuth (°)	Map No.
D2-1	1.1	65	74
G2-1	1.4	125	75
A9-2	9.3	357	80
P3-1	2.6	293	81
A15-1	10.5	10	82
E1-3	0.7	90	83
E2-1	1.1	80	84
H1-2	0.9	150	85
E6-1	5.9	100	86
M15-2	13.6	253	87
D1-3	0.5	65	88
A2-1	1.2	5	72
P7-1	6.7	293	76
K15-2	12.8	208	77
A15-2	14.2	9	73
F3-1	2.3	104	78
E2-2	1.1	93	79
B15-1	10.3	12	89
E1-2	0.4	95	2
R15-2	12.4	329	55
F1-1	0.5	117	91
J2-2	1.5	178	90
A4-1	3.3	10	93
M2-2	1.3	252	94
N2-2	1.3	265	95
H1-3	0.7	150	96

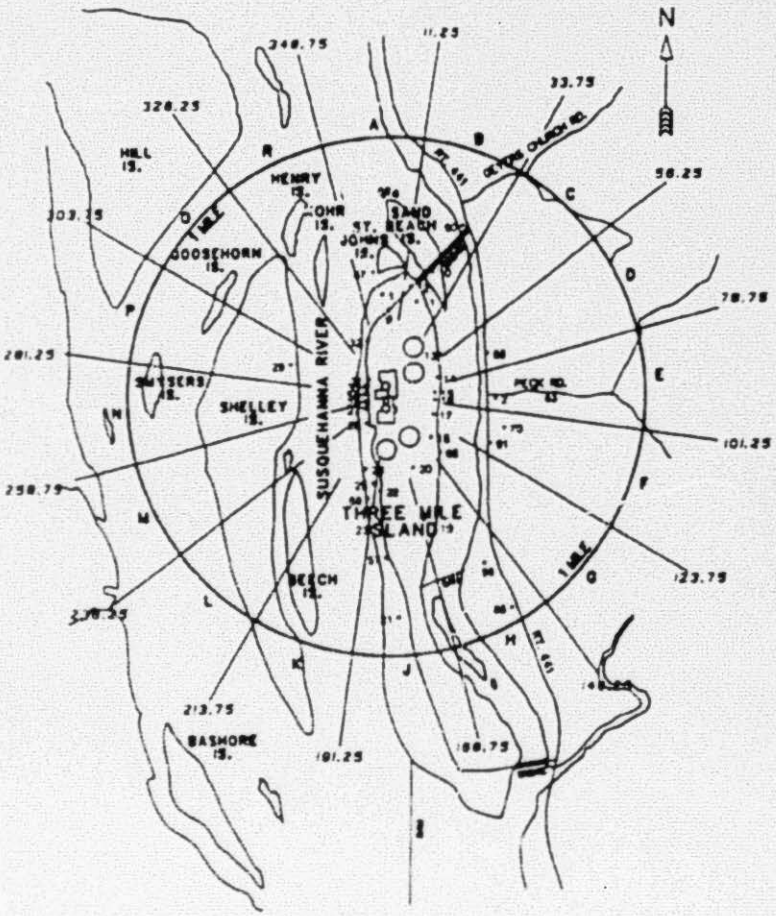

MAP 1

THREE MILE ISLAND NUCLEAR STATION
LOCATIONS OF RADIOLOGICAL ENVIRONMENTAL MONITORING PROGRAM
STATIONS WITHIN 1 MILE OF THE SITE

MAP 8.1
THREE MILE ISLAND NUCLEAR STATION
LOCATIONS OF RADIOLOGICAL ENVIRONMENTAL MONITORING PROGRAM
STATIONS WITHIN 1 MILE OF THE SITE

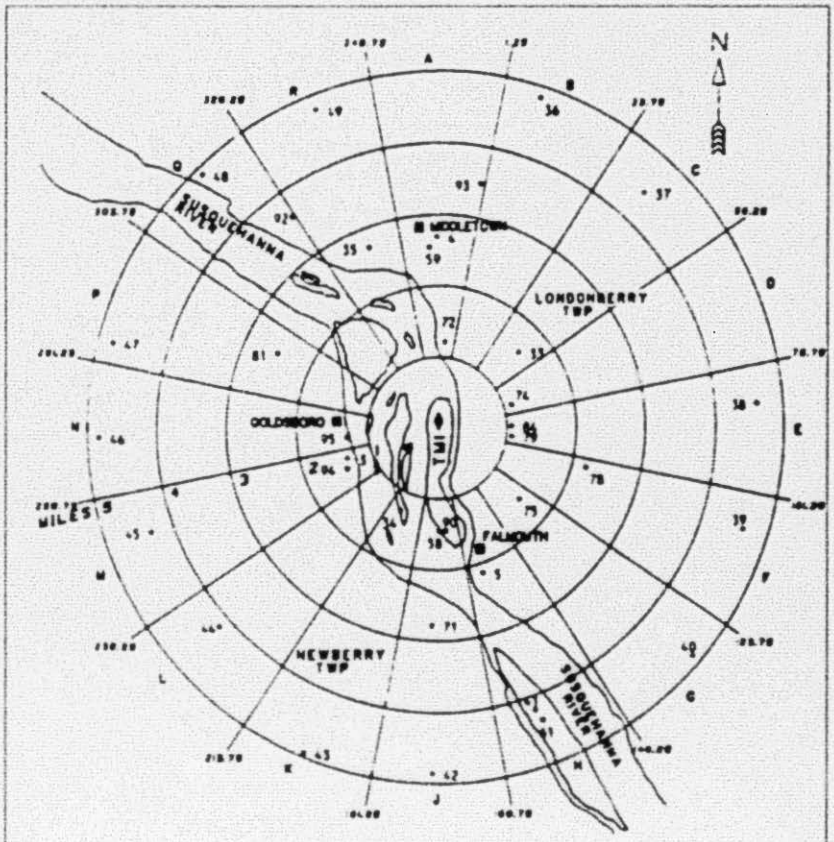

MAP 2

THREE MILE ISLAND NUCLEAR STATION
LOCATIONS OF RADIOLOGICAL ENVIRONMENTAL MONITORING PROGRAM
STATIONS WITHIN 5 MILES OF THE SITE

MAP 8.2

THREE MILE ISLAND NUCLEAR STATION
LOCATIONS OF RADIOLOGICAL ENVIRONMENTAL MONITORING PROGRAM
STATIONS WITHIN 5 MILES OF THE SITE

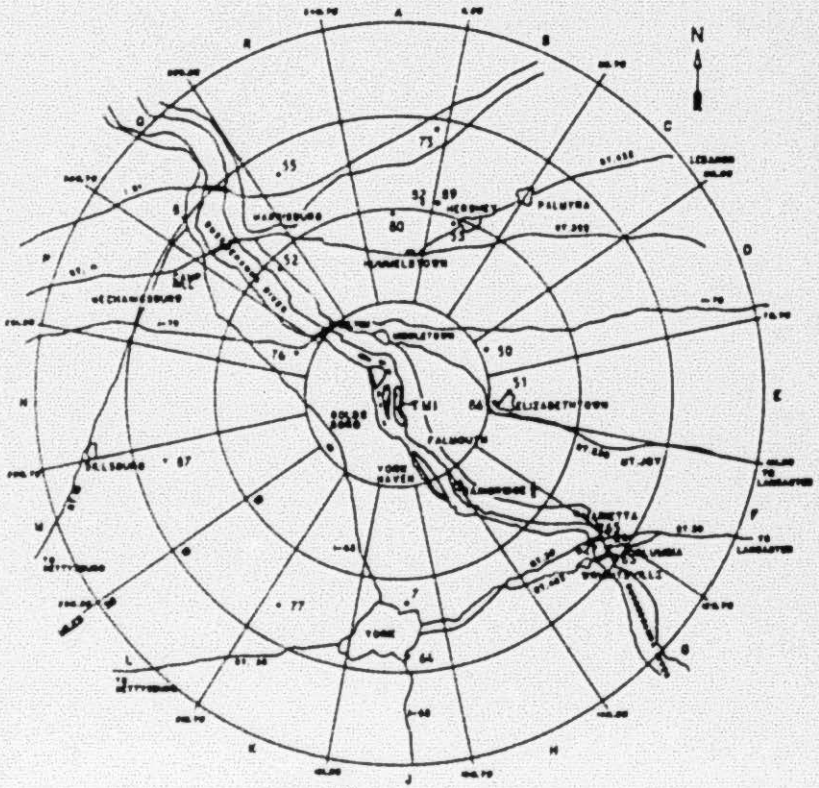

MAP 3

THREE MILE ISLAND NUCLEAR STATION
LOCATIONS OF RADIOLOGICAL ENVIRONMENTAL MONITORING PROGRAM
STATIONS GREATER THAN 5 MILES FROM THE SITE

MAP 8.3
THREE MILE ISLAND NUCLEAR STATION
LOCATIONS OF RADIOLOGICAL ENVIRONMENTAL MONITORING PROGRAM
STATIONS GREATER THAN 5 MILES FROM THE SITE

9.0 PART I REFERENCES

1. EPRI NP-3840, RP 1560-3 Final Report, "Environmental Radiation Doses From Difficult-To-Measure Nuclides," January 1985

2. "Evaluation of the Three Mile Island Nuclear Station Unit 1 to Demonstrate Conformance to the Design Objectives of 10 CFR 50, Appendix I," Nuclear Safety Associates, May 1976

3. TMI-1 Final Safety Analysis Report (FSAR)

4. TMI-2 Final Safety Analysis Report (FSAR)

5. Meteorological Information and Dose Assessment System (MIDAS)

6. NUREG-0017, "Calculation of Releases of Radioactive Materials in Gaseous and Liquid Effluents from PWR," Revision 1, 1985

7. NUREG-0133, "Preparation of Radiological Effluent Technical Specifications for Nuclear Power Plants," October 1978

8. NUREG-0172, "Age-Specific Radiation Dose Commitment Factors For A One-Year Chronic Intake," November 1977

9. Regulatory Guide 1.21, "Measuring, Evaluating, and Reporting Radioactivity in Solid Wastes and Releases of Radioactive Materials in Liquid and Gaseous Effluents from Light-Water Cooled Nuclear Power Plants," Revision 1, June 1974

10. Regulatory Guide 1.109, "Calculation of Annual Doses to Man from Routine Releases of Reactor Effluents for the Purpose of Evaluating Compliance with 10 CFR 50, Appendix I," Revision 1, October 1977

11. Simplified Environmental Effluent Dosimetry System (SEEDS)

12. TMI Recirculation Factor Memos, April 12, 1988 and March 17, 1988

13. TMI-1 Operations Procedure, 1101-2.1, "Radiation Monitor Set Points"

14. Title 10, Code of Federal Regulations, "Energy"

15. TMI-1 Technical Specifications, attached to Facility Operating License No. DPR-50

16. Regulatory Guide 1.111, "Methods for Estimating Atmospheric Transport and Dispersion of Gaseous Effluents in Routine Releases from Light-Water-Cooled Reactors," Revision 1, July 1977

17. TMI-2 PDMS Technical Specifications, attached to Facility License No. DPR-73

18. Radiological Assessment Branch Technical Position on Environmental Monitoring, Revision 1, November 1979

19. Title 40, Code of Federal Regulations, "Protection of Environment"

20. Regulatory Guide 4.13, "Performance, Testing, and Procedural Specifications for Thermoluminescence Dosimetry: Environmental Applications," Revision 1, July 1977

21. Post-Defueling Monitored Storage Safety Analysis Report (PDMS SAR)

PART II

TMI-2 RADIOLOGICAL EFFLUENT CONTROLS

PART II

Definitions

1.0 DEFINITIONS

DEFINED TERMS

1.1 The DEFINED TERMS of this section appear in capitalized type and are applicable throughout Part II of the ODCM.

FACILITY MODE 3

1.2 Post-Defueling Monitored Storage (PDMS) is that condition where TMI-2 defueling has been completed, the core debris removed from the reactor during the clean-up period has been shipped off-site and the facility has been placed in a stable, safe and secure condition.

ACTION

1.3 ACTION shall be those additional requirements specified as corollary statements to each control and shall be part of the controls.

OPERABLE - OPERABILITY

1.4 A system, subsystem, train, component or device shall be OPERABLE or have OPERABILITY when it is capable of performing its specified function(s). Implicit in this definition shall be the assumption that all necessary attendant instrumentation, controls, normal and emergency electrical power sources, cooling or seal water, lubrication or other auxiliary equipment, that are required for the system, subsystem, train, component or device to perform its function(s), are also capable of performing their related support function(s).

CHANNEL CALIBRATION

1.5 A CHANNEL CALIBRATION shall be the adjustment, as necessary, of the channel output such that it responds with necessary range and accuracy to known values of the parameter which the channel monitors. The CHANNEL CALIBRATION shall encompass the entire channel including the sensor and alarm and/or trip functions, and shall include the CHANNEL FUNCTIONAL TEST. CHANNEL CALIBRATION may be performed by any series of sequential, overlapping or total channel steps such that the entire channel is calibrated.

CHANNEL CHECK

1.6 A CHANNEL CHECK shall be the qualitative assessment of channel behavior during operation by observation. This determination shall include, where possible, comparison of the channel indication and/or status with other indications and/or status derived from independent instrument channels measuring the same parameter.

NOTE

For radioactive effluent monitors, except for those in Table 2.2-1, this shall include a verification which provides a qualitative assessment of channel response when the channel sensor is exposed to a radioactive source.

CHANNEL FUNCTIONAL TEST

1.7 A CHANNEL FUNCTIONAL TEST shall be:

a. Analog channels - the injection of a simulated signal into the channel as close to the primary sensor as practicable to verify OPERABILITY including alarm and/or trip functions.

b. Bistable channels - the injection of a simulated signal into the channel sensor to verify OPERABILITY including alarm and/or trip functions.

FREQUENCY NOTATION

1.8 The FREQUENCY NOTATION specified for the performance of Surveillance Requirements shall correspond to the intervals defined in Table 1.1.

COMPOSITE SAMPLE

1.9 A COMPOSITE SAMPLE is a combination of individual samples obtained at regular intervals over a time period. Either the volume of each individual sample is proportional to the flow rate discharge at the time of sampling or the number of equal volume samples is proportional to the time period used to produce the composite.

GRAB SAMPLE

1.10 A GRAB SAMPLE is an individual sample collected in less than fifteen minutes.

BATCH RELEASE

1.11 A BATCH RELEASE is the discharge of fluid waste of a discrete volume.

CONTINUOUS RELEASE

1.12 A CONTINUOUS RELEASE is the discharge of fluid waste of a non-discrete volume, e.g., from a volume or system that has an input flow during the CONTINUOUS RELEASE.

TABLE 1.1

Frequency Notation

NOTATION	FREQUENCY
S (Shiftly)	At least once per 12 hours.
D (Daily)	At least once per 24 hours.
W (Weekly)	At least once per 7 days.
M (Monthly)	At least once per 31 days.
Q (Quarterly)	At least once per 92 days.
SA (Semi-Annually)	At least once per 184 days.
A (Annually)	At least once per 12 months.
R	At least once per 18 months.
N.A.	Not applicable.

SECTIONS 2.0, 3.0 AND 4.0

Controls and Surveillance Requirements

2/3.0 APPLICABILITY

CONTROLS

2/3.0.1 Controls and ACTION requirements shall be applicable during the conditions specified for each control.

2/3.0.2 Adherence to the requirements of the Control and/or associated ACTION within the specified time interval shall constitute compliance with the control. In the event the Control is restored prior to expiration to the specified time interval, completion of the ACTION statement is not required.

2/3.0.3 In the event the Control and/or associated ACTION requirements cannot be satisfied because of circumstances in excess of those addressed in the Control, initiate appropriate actions to rectify the problem to the extent possible under the circumstances, and submit a special report to the Commission pursuant to TMI-2 PDMS Technical Specification (Tech. Spec.) Section 6.8.2 within 30 days unless otherwise specified.

SURVEILLANCE REQUIREMENTS

4.0.1 Surveillance Requirements shall be applicable during the conditions specified for individual Controls unless otherwise stated in an individual Surveillance Requirement. The Surveillance Requirements shall be performed to demonstrate compliance with the OPERABILITY requirements of the Control.

4.0.2 Each Surveillance Requirement shall be performed within the specified time interval with:

a. A maximum allowable extension not to exceed 25% of the surveillance interval, and

b. A total maximum combined interval time for any 4 consecutive tests not to exceed 3.25 times the specified surveillance interval.

4.0.3 Performance of a Surveillance Requirement within the specified time interval shall constitute compliance with OPERABILITY requirements for a Control and associated ACTION statements unless otherwise required by the Control.

BASES

The Controls of this section provide the general requirements applicable to each of the Control and Surveillance Requirements.

2/3.0.1 This Control defines the applicability of each Control in terms of the specified conditions and is provided to delineate specifically when each Control is applicable.

2/3.0.2 This Control defines those conditions necessary to constitute compliance with the terms of an individual Control and associated ACTION requirement.

2/3.0.3 This Control delineates the ACTION to be taken for circumstances not directly provided for in the ACTION statements or when the provisions of the stated ACTION statement are not or cannot be complied with. The intent of this Control is to require that inoperable equipment be restored to an OPERABLE status in a prompt manner, that the unit be maintained in stable conditions, and that the Commission be promptly notified of such conditions.

4.0.1 This Control provides that surveillance activities necessary to ensure the Controls are met and will be performed during the FACILITY MODE or other conditions for which the Controls are applicable.

4.0.2 The provisions of this Control provide allowable tolerances for performing surveillance activities beyond those specified in the normal surveillance interval. These tolerances are necessary to provide operational flexibility because of scheduling and performance considerations. The phrase "at least" associated with a surveillance frequency does not negate this allowable tolerance value and permits the performance of more frequent surveillance activities.

The tolerance values, taken either individually or consecutively over 3 test intervals, are sufficiently restrictive to ensure that the reliability associated with the surveillance activity is not degraded beyond that obtained from the nominal specified interval.

4.0.3 The provisions of this Control set forth the criteria for determination of compliance with the OPERABILITY requirements of the Control. Under this criteria, equipment, systems or components are assumed to be OPERABLE if the associated surveillance activities have been satisfactorily performed within the specified time interval. Nothing in this provision is to be construed as defining equipment, systems or components OPERABLE, when such items are found or known to be inoperable although still meeting the Surveillance Requirements.

2.0 RADIOLOGICAL EFFLUENT REQUIREMENTS

2.1 Radioactive Discharges

2.1.1 Liquid Effluents

2.1.1.1 OBJECTIVES

To define the limits and conditions for the controlled release of liquid radioactive effluents to the environs to ensure that these releases are as low as practicable. These releases should not result in radiation exposures to offsite areas greater than a few percent of background exposures. The instantaneous release rate for all effluent discharges should be within ten times the concentrations specified in 10 CFR Part 20.

To assure that the releases of radioactive liquids to offsite areas meet the "as low as practicable" concept, the following objectives apply:

A. The annual total quantity of radioactive materials in liquid waste, excluding tritium and dissolved gases, should not exceed 5 curies per radioactive waste-producing reactor, and the annual dose to the whole body or any organ of an individual should not exceed 3 mrem to the total body and shall be less than or equal to 10 mrem to any organ.

B. The annual average concentration of radioactive materials in the effluent from the Mechanical Draft Cooling Towers prior to dilution in the Susquehanna River, excluding tritium and dissolved gases, should not exceed 2E-8 μCi/ml.

C. The annual average concentration of tritium in liquid waste prior to dilution in the environment should not exceed 5E-6 μCi/ml.

2.1.1.2 APPLICABILITY

Applies to the controlled release of radioactive liquids from TMI-2.

2.1.1.3 CONTROLS

A. The radioactivity release concentration in liquid effluents from TMI-2 to the environment shall not exceed ten times the values specified in 10 CFR 20, Appendix B, for unrestricted areas.

B. The total release of radioactive liquid effluent from TMI-2, excluding tritium and noble gases, shall not exceed 10 curies during any calendar quarter.

C. The equipment installed in the liquid radioactive waste system shall be maintained and shall be operated to process all radioactive liquid wastes prior to this discharge when the activity release rate will exceed 1.25 curies, excluding tritium and dissolved gases, during any calendar quarter.

D. The maximum radioactivity to be contained in one liquid radwaste tank, excluding tritium and dissolved gases, that can be discharged directly, to the environs, shall not exceed 10 curies.

E. When the average release rate of radioactive effluents, excluding tritium and dissolved gases, exceeds 2.5 curies per radioactive waste-producing reactor during any calendar quarter, the licensee shall notify the NRC within 30 days, identifying the causes and describing the proposed program of action to reduce such release rates.

F. The dose or dose commitment from liquid effluents shall be less than or equal to 3 mrem total body and less than or equal to 10 mrem to any organ for the calendar year.

2.1.1.4 BASES

Liquid radioactive waste release levels to unrestricted areas should be kept "as low as practicable" and are not to exceed ten times the concentrations specified in 10 CFR 20. The Controls provide reasonable assurance that the resulting annual exposure to an individual in off-site areas will not exceed the design objectives of Appendix I to 10 CFR Part 50, which were established as requirements for the cleanup of TMI-2 in the NRC's Statement of Policy of April 27, 1981. This assurance is based on the fact that the Susquehanna River will dilute the liquid effluents upon their release from the site. The effluents will be diluted by a factor of about 250 in the region where finfish can exist (within a one-quarter mile radius of the discharge point). At the same time these Controls permit flexibility under unusual conditions, which may temporarily result in higher than normal releases, but still within ten times the concentrations, specified in 10 CFR 20. It is expected that by using this flexibility under unusual conditions, and exerting every effort to keep levels of radioactive material in liquid wastes as low as practicable, the annual releases will not exceed a small fraction of the annual average concentrations specified in 10 CFR 20.

Control 2.1.1.3 A. above requires the licensee to limit the concentration of radioactive materials in liquid effluents from TMI-2 to ten times the levels specified in 10 CFR 20, Appendix B, for unrestricted areas. This Control provides assurance that no member of the general public can be exposed to liquids containing radioactive materials in excess of limits considered permissible under the Commission's rules and regulations.

Control 2.1.1.3 B. above establishes an upper limit for the release of radioactive liquid effluents, excluding tritium and dissolved gases, of 10 curies during any calendar quarter. The intent of this Control is to permit the licensee flexibility under unusual conditions, which may temporarily result in releases higher than the levels normally achievable when the unit and the liquid radwaste equipment are functioning as designed. Releases of up to 10 curies during any calendar quarter will result in concentrations of radioactive materials in liquid effluents at small percentages of the concentrations specified in 10 CFR 20.

Control 2.1.1.3 C. requires the licensee to maintain and operate the equipment installed in the liquid radioactive waste system to reduce the release of radioactive materials in liquid effluents to as low as practicable, consistent with the requirements of 10 CFR 50.36a. Normal use and maintenance of installed equipment in the liquid radioactive system is expected to result in releases of not more than about five curies per year, excluding tritium and dissolved gases during normal operations. In order to keep releases of radioactive materials as low as practicable, the Control requires, as a minimum, operation of equipment whenever the rate of release exceeds 1.25 curies per quarter, excluding tritium and dissolved gases.

In addition to Control 2.1.1.3 B., the reporting requirements of Control 2.1.1.3 E. and Section 6.6 of the TMI-2 PDMS Tech. Specs., delineate that the licensee shall identify the cause whenever the rate of radioactive effluents, excluding tritium and noble gases, exceeds 2.5 curies during any calendar quarter and describe the proposed program of action to reduce such release rates. This report must be filed within 30 days following the calendar quarter in which the 2.5 curie release occurred.

Control 2.1.1.3 F. requires that the dose to offsite personnel be limited to the design objectives of Appendix I of 10 CFR Part 50. This will assure the dose received by the public during the cleanup is equivalent to or less than that from a normal operating reactor. The limits also assure that the environmental impacts are consistent with those assessed in NUREG-0683, the TMI-2 Programmatic Environmental Impact Statement (PEIS).

2.1.2 Gaseous Effluents

2.1.2.1 OBJECTIVES

To define the limits and conditions for the controlled release of radioactive gaseous effluents to the environs to ensure that these releases are as low as practicable. These releases should not result in radiation exposures in offsite areas greater than a few percent of background exposures.

To assure that the release of radioactive gases to offsite areas meet the as low as practicable concept, the release rate of gaseous effluents shall not result in doses to the public exceeding the design objectives of Appendix I to 10 CFR Part 50.

2.1.2.2 APPLICABILITY

Applies to the controlled release of radioactive gases from TMI-2.

2.1.2.3 CONTROLS

A. The instantaneous dose rate from release of gross gaseous activity except for halogens and particulates with half-lives longer than eight days shall not exceed 500 mrem/year to the total body and 3000 mrem/year to the skin.

B. The instantaneous dose rate from release of particulates with half-lives greater than eight days, to the environs as part of the airborne effluents, shall not exceed 1500 mrem/year to any organ.

C. Radioactive gases and particulates purged from the Reactor Building shall be filtered through the high efficiency particulate air filters.

D. The air dose due to noble gases in gaseous effluents shall be less than or equal to 10 mrad for gamma radiation and less than or equal to 20 mrad for beta radiation for the calendar year, and less than or equal to 5 mrad for gamma radiation and 10 mrad for beta radiation for any calendar quarter.

E. The dose for radioactive (other than noble gaseous effluents) shall be less than or equal to 15 mrem to any organ for the calendar year, and 7.5 mrem to any organ for any calendar quarter.

F. When the release of radioactive materials in gaseous wastes exceeds the values in Controls A, B, D or E, the licensee shall notify the NRC within 30 days, identifying the causes and describing the proposed program of action to reduce such releases.

2.1.2.4 BASES

The specified levels provide reasonable assurance that the resulting annual exposure rate from noble gases at any location at the site boundary will not exceed 10 millirems per year. At the same time, these Controls permit flexibility under unusual conditions, which may temporarily result in higher than the design objective levels, but still within the dose limits specified in 10 CFR 20 and within the design objectives of Appendix I to 10 CFR 50. It is expected that using this flexibility under unusual conditions, and by exerting every effort to keep levels of radioactive material in gaseous wastes as low as practicable, the annual releases will not exceed a small fraction of the annual dose limits specified in 10 CFR 20 and will not result in doses which exceed the design objectives of Appendix I to 10 CFR 50, which were endorsed as limits for the cleanup of TMI-2 by the NRC's Statement of Policy of April 27, 1981.

These efforts should include consideration of meteorological conditions during releases.

Control 2.1.2.3 A., requires the licensee to limit the concentration of noble gases from TMI-2 to unrestricted areas to levels such that no individual will receive dose at a rate greater than 500 mrem/yr to the total body or 3000 mrem/yr to the skin.

Control 2.1.2.3 B., requires the licensee to limit the concentration of particulates with half-lives greater than eight days, released from TMI-2 to unrestricted areas to levels such that no individual will receive dose at a rate greater than 1500 mrem/yr to any organ. The absence of iodine ensures that the corresponding thyroid dose rate above background to an infant via the cow-milk-infant pathway is less than or equal to 1500 mrem/yr. A grazing period of 6 months has been applied to all radionuclides in particulate form with half-lives greater than 8 days, to allow for the milk exposure pathway.

Control 2.1.2.3 C., limits the radioactivity that may be released to the environment to "as low as practicable."

In addition to the requirements of Controls 2.1.2.3 B., D. and E., the reporting requirements of Control 2.1.2.3 F. delineate that the licensee shall identify the cause whenever the radioactive gaseous releases exceed Control 2.1.2.3 D. or Control 2.1.2.3 E., and describe the proposed program of action to reduce such releases. The report must be filed within 30 days following the calendar quarter in which the release occurred.

2.2 Radioactive Gaseous Effluent Monitoring Instrumentation

2.2.1 OBJECTIVE

The radioactive gaseous effluent monitoring instrumentation channels shown in Table 2.2-1 shall be OPERABLE.

2.2.2 APPLICABILITY

As shown in Table 2.2-1.

2.2.3 CONTROL

With less than the minimum number of radioactive gaseous effluent monitoring instrumentation channels OPERABLE, take the ACTION shown in Table 2.2-1.

2.2.4 BASES

The radioactive gaseous effluent instrumentation is provided to monitor and control, as applicable, the releases of radioactive materials in gaseous effluents during actual or potential releases of gaseous effluents. The OPERABILITY and use of this instrumentation is consistent with the requirements of General Design Criterion 64 of Appendix A to 10 CFR Part 50.

TABLE 2.2-1

Radioactive Gaseous Effluent Monitoring Instrumentation

INSTRUMENT	CHANNEL CHECK	CHANNEL CALIBRATION	CHANNEL FUNCTIONAL TEST	MINIMUM CHANNELS OPERABLE	APPLICABILITY	ACTION
HP-R-219 Gas	D	R	M	1	Note 1	Note 2
HP-R-219 Particulate	D	R	M	1	Note 1	Note 2
HP-R-219A Gas	D	R	M	1	Note 1	Note 3
HP-R-219A Particulate	D	R	M	1	Note 1	Note 3
HP-R-225 Gas	D	R	M	1	Note 1	Note 4
HP-R-225 Particulate	D	R	M	1	Note 1	Note 4

NOTES:

1. During operation of the monitored system.
2. If the same channel on HP-R-219A is inoperable, secure Reactor Building Purge if in progress.
3. If the same channel on HP-R-219 is inoperable, secure Reactor Building Purge if in progress.
4. If channel is inoperable, secure Reactor Building Purge if in progress.

3.0 MONITORING REQUIREMENTS

3.1 Radioactive Discharges

3.1.1 Liquid Effluents

3.1.1.1 OBJECTIVE

To ensure that radioactive liquid releases from the facility are within the limits of Controls 2.1.1.3 A. through F.

3.1.1.2 CONTROLS

During release of liquid radioactive wastes from Radioactive Waste-Miscellaneous Liquids System, the following conditions shall be met:

A. Facility records shall be maintained of the radioactive concentrations and volume before dilution of each batch of liquid effluent released, and the average dilution flow and length of time over which each discharge occurred. Estimates of the error associated with each reported value should be included in facility records.

B. Radioactive liquid waste sampling and activity analysis shall be performed in accordance with Table 3.1-1. Prior to the release of each batch of liquid effluent, a sample shall be taken from that batch and analyzed for the concentration of each significant gamma emitter to demonstrate compliance with Control 2.1.1.3 A. using the flow into which the effluent is discharged.

3.1.1.3 BASES

These monitoring requirements provide the data for the licensee and the Commission to evaluate the station's performance relative to radioactive liquid wastes released to the environment. Reports on the quantities of radioactive materials released in liquid effluents shall be furnished to the Commission on the basis of ODCM Part III Requirements. On the basis of such reports and any additional information obtained from the licensee or others, the Commission may require the licensee to take appropriate action.

3.1.2 Gaseous Effluents

3.1.2.1 OBJECTIVE

To ensure that radioactive gaseous releases from the facility are within the limits of Controls 2.1.2.3 A. through F.

3.1.2.2 CONTROLS

During release of radioactive gaseous wastes, the following conditions shall be met:

A. During purge of the Reactor Building, the following conditions shall be met:

1. The Reactor Building Purge Exhaust Monitors (HP-R-225 and HP-R-219 or similar device) shall be OPERABLE

2. The Purge Exhaust Valves (D5129 A/D) shall be OPERABLE.

3. The Purge Exhaust Valves (D5129 A/D) shall be interlocked to recirculate on receipt of a high radiation signal from the Reactor Building Exhaust Monitor (HP-R-225).

B. The flow rate for radioactive effluent streams and the Auxiliary and Fuel Handling Buildings and the Reactor Building, shall be monitored and recorded. Gaseous effluents from the Reactor Building Purge Exhaust shall be continuously monitored and recorded.

C. Radioactive gaseous waste sampling and activity analysis shall be performed in accordance with Table 3.1-2.

D. Facility records shall be maintained of radioactive concentration, release ratio and volume of each batch of gaseous effluents released and the length of time over which release occurred. Estimates of the error associated with each reported value should be included in facility records.

E. The Unit Vent monitors (HP-R-219, HP-R-219A, and HP-R-225) shall be CALIBRATED at least every eighteen months by means of a known radioactive source. These detectors shall have a CHANNEL FUNCTIONAL TEST at least monthly, and a CHANNEL CHECK at least daily, to verify that the read-out device is indicated as expected.

F. The release of radioactive materials, other than noble gases, in gaseous effluents shall be determined to be within the limits calculated in accordance with this Control by obtaining representative samples and performing analyses in accordance with the sampling and analysis program, specified in Table 3.1-2.

3.1.2.3 BASES

Controls 3.1.2.2 A. through E. require that suitable equipment to monitor the radioactive gaseous releases are operating during any period these releases are taking place.

Control 3.1.2.2 F. is provided to ensure that the dose to a member of the public from gaseous effluents from TMI-2 will be within the limits of Control 2.1.2.3 D and Control 2.1.2.3 E.

These monitoring requirements provide assurance that radioactive gaseous effluents from the station are properly controlled and monitored over the life of the station. These monitoring requirements provide the data for the licensee and the Commission to evaluate the station's performance relative to radioactive gaseous wastes released to the environment.

Reports on the quantities of radioactive materials released in gaseous effluents shall be furnished to the Commission on the basis of ODCM Part III requirements. On the basis of such report and any additional information the Commission may obtain from the licensee or others, the Commission may from time to time require the licensee to take such action as the Commission deems appropriate.

3.2 Radioactive Gaseous Effluent Monitoring Instrumentation

Each radioactive gaseous effluent monitoring instrumentation channel shall be demonstrated OPERABLE by performance of the CHANNEL CHECK, CHANNEL CALIBRATION and CHANNEL FUNCTIONAL TEST operations at the frequencies shown in Table 2.2-1 (per occupational exposure considerations and detector sensitivity in ambient radiation areas).

TABLE 3.1-1

Radioactive Liquid Waste Sampling and Analysis (4, 5)

A. Liquid Releases

Sampling Frequency	Type of Activity Analysis	Detectable Concentration (3)
Each Batch	Individual Gamma	5E-7 μCi/ml (2)
	H-3	1E-5 μCi/ml
Monthly Composite (1)	Gross Alpha	1E-7 μCi/ml
	Sr-89	5E-8 μCi/ml
	Sr-90	5E-8 μCi/ml

NOTES:

(1) A COMPOSITE SAMPLE is one in which the quantity of liquid sampled is proportional to the quantity of liquid waste discharged from the plant.

(2) For certain mixtures of gamma emitters, it may not be possible to measure radionuclides in concentrations near this sensitivity limit when other nuclides are present in the sample in much greater concentrations. Under these circumstances, it will be more appropriate to calculate the concentrations of such radionuclides using measured ratios with those radionuclides which are routinely identified and measured.

(3) The detectability limits for radioactivity analysis are based on the technical feasibility and on the potential significance in the environment of the quantities released. For some nuclides, lower detection limits may be readily achievable and when nuclides are measured below the stated limits, they should also be reported.

(4) The results of these analyses should be used as the basis for recording and reporting the quantities of radioactive material released in liquid effluents during the sampling period. In estimating releases for a period when analyses were not performed, the average of the two adjacent data points spanning this period should be used. Such estimates should be included in the effluent records and reports; however, they should be clearly identified as estimates, and the method used to obtain these data should be described.

(5) Deviations from the sampling/analysis regime will be noted in the report specified in ODCM Part III.

TABLE 3.1-2

Radioactive Gaseous Waste Sampling and Analysis (3)

SAMPLE POINT	SAMPLE TYPE	SAMPLING FREQUENCY	TYPE OF ACTIVITY ANALYSIS	DETECTABLE CONCENTRATION(1)(a)
Reactor Building Purge Releases	Gas	Each Purge	H-3	1E-6 μCi/cc
			Individual Gamma Emitters	1E-4 μCi/cc (2)
Unit Exhaust Vent Release Points	Gas	Monthly	H-3	1E-6 μCi/cc
			Individual Gamma Emitters	1E-4 μCi/cc (2)
	Particulates	Weekly	Individual (b) Gamma Emitters	1E-10 μCi/cc (2)
		Monthly Composite	Sr-90	1E-11 μCi/cc
		Monthly Composite	Gross Alpha Emitters	1E-11 μCi/cc
Reactor Building Breather	Particulates	Semi-Annually	Indv. Gamma Emitters (b)	1E-10 μCi/cc (2)
			Sr-90	1E-11 μCi/cc
			Gross Alpha Emitters	1E-11 μCi/cc

(1) The above detectability limits are based on technical feasibility and on the potential significance in the environment of the quantities released. For some nuclides, lower detection limits may be readily achievable and when nuclides are measured below the stated limits, they should also be reported.

(2) For certain mixtures of gamma emitters, it may be possible to measure radionuclides at levels near their sensitivity limits when other nuclides are present in the sample at much higher levels. Under these circumstances, it will be more appropriate to calculate the levels of such radionuclides using observed ratios in the gaseous component in the reactor coolant for those radionuclides which are measurable.

(3) Deviations from the sampling and analysis regime will be noted in the report specified in ODCM Part III

TABLE 3.1-2 (Cont'd)

Radioactive Gaseous Waste Sampling and Analysis Program

Table Notation

a. The LLD is the smallest concentration of radioactive material in a sample that will be detected with 95% probability with 5% probability of falsely concluding that a blank observation represents a "real" signal.

For a particular measurement system (which may include radiochemical separation):

$$LLD = \frac{4.66\ S_b}{E \cdot V \cdot 2.22 \cdot Y \cdot \exp\ (-\lambda \Delta t)}$$

Where

LLD is the lower limit of detection as defined above (as picocurie per unit mass or volume).

S_b is the standard deviation of the background counting rate or of the counting rate of a blank sample as appropriate (as counts per minute).

E is the counting efficiency (as counts per transformation),

V is the sample size (in units of mass or volume),

2.22 is the number of transformations per minute per picocurie,

Y is the fractional radiochemical yield (when applicable),

λ is the radioactive decay constant for the particular radionuclide, and

Δt is the elapsed time between midpoint of sample collection and time of counting (for plant effluents, not environmental samples),

The value of S_b used in the calculation of the LLD for a detection system shall be based on the actual observed variance of the background counting rate or of the counting rate of the blank samples (as appropriate) rather than on an unverified theoretically predicted variance. In calculating the LLD for a radionuclide determined by gamma-ray spectrometry, the background shall include the typical contributions of other radionuclides normally present in the samples. Typical values of E, V, Y, and Δt shall be used in the calculation. The background count rate is calculated from the background counts that are determined to be with ± one FWHM (Full-Width-at-Half-Maximum) energy band about the energy of the gamma-ray peak used for the quantitative analysis for that radionuclide.

TABLE 3.1-2 (Cont'd)

Radioactive Gaseous Waste Sampling and Analysis Program

Table Notation

b. The principal gamma emitters for which the LLD specification applies exclusively are the following radionuclides: Mn-54, Fe-59, Co-58, Co-60, Zn-65, Mo-99, Cs-134, Cs-137, Ce-141 and Ce-144 for particulate emissions. This list does not mean that only these nuclides are to be detected and reported. Other peaks which are measurable and identifiable, together with the above nuclides, shall also be identified and reported. Nuclides which are below the LLD for the analyses shall be reported as "less than" the nuclide's LLD and shall not be reported as being present at the LLD level for that nuclide. The "less than" values shall not be used in the required dose calculations.

SECTION 4.0

Design Features

4.0 DESIGN FEATURES

4.1 SITE

EXCLUSION AREA

4.1.1 The exclusion area is shown in Figure 5-1, TMI-1 Tech. Specs.

LOW POPULATION ZONE

4.1.2 The low population zone is shown in Figure 5-2, TMI-1 Tech. Specs.

SITE BOUNDARY FOR GASEOUS EFFLUENTS

4.1.3 The site boundary for gaseous effluents shall be as shown in Figure 5-3, TMI-1 Tech. Specs.

SITE BOUNDARY FOR LIQUID EFFLUENTS

4.1.4 The site boundary for liquid effluents shall be as shown in Figure 5-3, TMI-1 Tech. Specs.

5.0 PART II REFERENCES

5.1 NUREG-0683, "Final Programmatic Environmental Impact Statement related to decontamination and disposal of radioactive wastes resulting from March 28, 1979, accident Three Mile Island Nuclear Station, Unit 2," March 1981, and its supplements.

5.2 TMI-2 PDMS Technical Specifications, attached to Facility License No. DPR-73

5.3 Title 10, Code of Federal Regulations, "Energy"

5.4 "Statement of Policy Relative to the NRC Programmatic Environmental Impact Statement on the Cleanup of Three Mile Island Unit 2," dated April 27, 1981

5.5 Regulatory Guide 1.109, "Calculation of Annual Doses to Man from Routine Releases of Reactor Effluents for the Purpose of Evaluating Compliance with 10 CFR Part 50, Appendix I," Revision 1, October 1977

5.6 DOE/TIC-27601, Atmospheric Science and Power Reduction

5.7 TMI-1 Technical Specifications, attached to Facility Operating License No. DPR-50

5.8 PDMS - SAR

PART III

REPORTING REQUIREMENTS

PART III

Reporting Requirements

1.0 TMI ANNUAL RADIOLOGICAL ENVIRONMENTAL OPERATING REPORT*

1.1 Routine Radiological Environmental Operating Reports covering the operation of the unit during the previous calendar year shall be submitted to the Commission prior to May 1 of each year.

1.2 The Annual Radiological Environmental Operating Reports shall include summaries, interpretations, and an analysis of trends of the results of the radiological environmental monitoring activities for the report period, including a comparison with pre-operational studies, with operational controls as appropriate, and with previous environmental monitoring reports, and an assessment of the observed impacts of the plant operation on the environment. The reports shall also include the results of Land Use Censuses required by Part I, Section 8.2.

1.3 The Annual Radiological Environmental Operating Reports shall include the summarized tabulated results of analysis of all radiological environmental samples and environmental radiation measurements required by Part I Table 8.1 taken during the period pursuant to the locations specified in the tables and figures in this ODCM, as well as summarized and tabulated results of these analyses and measurements in a format similar to the table in the Radiological Assessment Branch Technical Position, Revision 1, November 1979. In the event that some individual results are not available for inclusion with the report, the report shall be submitted explaining the reasons for the missing results. The missing data shall be submitted as soon as possible in a supplementary report.

1.4 The reports shall also include the following: a summary description of the radiological environments monitoring program; a map(s) of all sampling locations keyed to a table giving distances and directions from a point that is midway between the Reactor Buildings of TMI-1 and TMI-2; the results of licensee participation in the Interlaboratory Comparison Program, required by Part I, Section 8.3; discussion of all deviations from the sampling schedule of Part I, Table 8.1; discussion of all the required analyses in which the LLD required by Part I, Table 8.3 was not achievable.

*A single submittal may be made for the station.

2.0 TMI ANNUAL RADIOACTIVE EFFLUENT RELEASE REPORT

NOTE

A single submittal may be made for the station. The submittal should combine those sections that are common to both units at the station however, for units with separate radwaste systems, the submittal shall specify the release of radioactive material from each unit.

2.1 Routine Radioactive Effluent Release Reports covering the operations of the unit during the previous 12 months of operation shall be submitted within 60 days after January 1 of each year for TMI-1 and prior to May 1 for TMI-2.

2.2 The following information shall be included in both Radioactive Effluent Release Reports to be submitted each year:

The Radioactive Effluent Release Reports shall include a summary of the quantities of radioactive liquid and gaseous effluents and solid waste released from the unit as outlined in Reg. Guide 1.21, Rev. 1, with data summarized on a quarterly basis following the format of Appendix B thereof.

2.3 The Radioactive Effluent Release Reports shall include the following information for each type of solid waste shipped offsite during the report period:

a. container volume,

b. total curie quantity (specify whether determined by measurement or estimate),

c. principal radionuclides (specify whether determined by measurement or estimate),

d. type of waste (e.g., spent resin, compacted dry waste, evaporator bottoms),

e. type of shipment (e.g., LSA, Type A, Type B) and

f. solidification agent (e.g., cement).

2.4 The Radioactive Effluent Release Reports shall include a summary of unplanned releases from the site to unrestricted areas of radioactive materials in gaseous and liquid effluents made during the reporting period.

2.5 The Radioactive Effluent Release Reports shall include any changes made during the reporting period to the PROCESS CONTROL PROGRAM (PCP) documents and to the OFFSITE DOSE CALCULATION MANUAL (ODCM), as well as a listing of new locations for dose calculations and/or environmental monitoring identified by the land use census pursuant to Part I Section 8.2.

2.6 The Radioactive Effluent Release Reports shall include the instrumentation not returned to OPERABLE status within 30 days per TMI-1 Tech. Spec. Sections 3.21.1.b and 3.21.2.b.

2.7 The Radioactive Effluent Release Report to be submitted shall include an annual summary of hourly meteorological data collected over the previous year. This annual summary may be either in the form of an hour-by-hour listing of wind speed, wind direction, atmosphere stability, and precipitation (if measured) on magnetic tape, or in the form of joint frequency distribution of wind speed, wind direction, and atmospheric stability.

2.8 The Radioactive Effluent Release Report shall include an assessment of the radiation doses due to the radioactive liquid and gaseous effluents released from the unit or station during the previous calendar year.

2.9 The Radioactive Effluent Release Report shall include an assessment of the radiation doses from radioactive liquid and gaseous effluents to MEMBERS OF THE PUBLIC due to their activities inside the site boundary (Figure 5-3, TMI-1 Tech. Specs.) during the report period. All assumptions used in making these assessments (i.e., specific activity, exposure time and location) shall be included in these reports. The meteorological conditions concurrent with the time of release of radioactive materials in gaseous effluents (as determined by sampling frequency and measurement) shall be used for determining the gaseous pathway doses. The assessment of radiation doses shall be performed in accordance with this ODCM.

2.10 The Radioactive Effluent Release Report shall also include an assessment of radiation doses to the likely most exposed real individual from reactor releases and other nearby uranium fuel cycle sources including doses from primary effluent pathways and direct radiation for the previous 12 consecutive months to show conformance with 40 CFR 190 "Environmental Radiation Protection Standards for Nuclear Power Operation." Acceptable methods for calculating the dose contributions from liquid and gaseous effluents are given in Regulatory Guide 1.109, Rev. 1.

3.0 PART III REFERENCES

3.1 Radiological Assessment Branch Technical Position, Revision 1, November 1979

3.2 Regulatory Guide 1.21, "Measuring, Evaluating, and Reporting Radioactivity in Solid Wastes and Releases of Radioactive Materials in Liquid and Gaseous Effluents from Light-Water-Cooled Nuclear Power Plants," Revision 1, June 1974

3.3 TMI-1 Technical Specifications, attached to Facility Operating License No. DPR-50

3.4 Title 40, Code of Federal Regulations, "Protection of Environment"

3.5 Regulatory Guide 1.109, "Calculation of Annual Doses to Man from Routine Releases of Reactor Effluents for the Purpose of Evaluating Compliance with 10 CFR Part 50, Appendix I," Revision 1, October 1977

3.6 Title 10, Code of Federal Regulations, "Energy"

3.7 Regulatory Guide 1.111, "Methods of Estimating Atmospheric Transport and Dispersion of Gaseous Effluents in Routine Releases from Light-Water-Cooled Reactors," Revision 1, July 1977

3.8 Regulatory Guide 1.112, "Calculation of Releases of Radioactive Materials in Gaseous and Liquid Effluents from Light-Water-Cooled Power Reactors," Revision O-R, April 1976

3.9 Regulatory Guide 1.113, "Estimating Aquatic Dispersion of Effluents from Accidental and Routine Reactor Releases for the Purpose of Implementing Appendix I," Revision 1, April 1977

APPENDIX A

P_i - Pathway Dose Rate Parameter

P_i (inhalation) = k' (BR) DFA_i (Eq A-1)

Where:

P_i = the pathway dose rate parameter for radionuclide, i, (other than noble gases) for the inhalation pathway, in mrem/yr per microcurie/m^3. The dose factors are based on the critical individual organ for the child age group.

k' = conversion factor, 1E6 pCi/microcurie

BR = 3700 m^3/yr, breathing rate for child (Reg. Guide 1.109, Rev. 1, Table E-5)

DFA_i = the maximum organ inhalation dose factor for the infant age group for the ith radionuclide (mRem/pCi). Values are taken from Table E-10, Reg. Guide 1.109 (Rev. 1).

Resolution of the units yields: (ODCM Part I Table 4.6)

P_i (inhalation) = 3.7E9 DFA_i (mrem/yr per μCi/m^3) (Eq A-2)

NOTE

The latest NRC Guidance has deleted the requirement to determine P_i (ground plane) and P_i (food). In addition, the critical age group has been changed from infant to child.

APPENDIX B

Ri - Inhalation Pathway Dose Factor

$R_i = k' (BR) (DFA_{iao})$ (mrem/yr per microcurie/m³) (Eq B-1)

Where:

k' = conversion factor, 1E6 pCi/microcurie

BR = breathing rate, 1400, 3700, 8000, 8000 m³/yr for infant, child, teenager, and adult age groups, respectively. (Reg. Guide 1.109, Rev. 1, Table E-5)

DFA_{iao} = the inhalation dose factor for organ, o, of the receptor of a given age group, a, and for the ith radionuclide, in mrem/pCi. The total body is considered as an organ in the selection of DFA_{iao}. Values are taken from Tables E-7 through E-10, Reg. Guide 1.109 (Rev. 1).

Resolutions of the units yields:

Ri = (1.4E9) (DFA_{iao}) infant (ODCM Part I Table 5.2.1)

Ri = (3.7E9) (DFA_{iao}) child (ODCM Part I Table 5.2.2)

Ri = (8.0E9) (DFA_{iao}) teen and adult (ODCM Part I Tables 5.2.3 and 5.2.4)

APPENDIX C

Ri - Ground Plane Pathway Dose Factor

$$R_i = k' k'' (SF) (DFG_i) [(1-e^{-\lambda_i t})/\lambda_i] \quad \text{(Eq C-1)}$$

Where:

k' = conversion factor, 1E6 pCi/microcurie

k'' = conversion factor, 8760 hr/yr

λ_i = decay constant for the ith radionuclide, sec^{-1}

t = the exposure time (this calculation assumes that decay is the only operating removal mechanism) 4.73×10^8 sec. (15 yrs), Reg. Guide 1.109 (Rev. 1), Appendix C

DFG_i = the ground plane dose conversion factor for the ith radionuclide (mrem/hr per pCi/m^2). Values are taken from Table E-6, Reg. Guide 1.109 (Rev. 1). These values apply to all age groups.

SF = 0.7, shielding factor, from Table E-15 Reg. Guide 1.109 (Rev. 1)

Reference ODCM Part I Table 5.3.1

APPENDIX D

Ri - Grass Cow-Milk Pathway Dose Factor

$$R_i = k' [(Q_f \times U_{ap}) / (\lambda_i + \lambda_w)] \times (F_m) \times (r) \times (DFL_{iao}) \times [((f_p \times f_s)/Y_p) + ((1-f_p \times f_s)\, e^{-\lambda_i t_h})/Y_s]\, e^{-\lambda_i t_f} \quad \text{(Eq D-1)}$$

Where:

k' = conversion factor, 1E6 picocurie/microcurie (pCi/μci)

Q_f = cow consumption rate, 50 kg/day, (Reg. Guide 1.109, Rev. 1)
goat consumption rate, 6 kg/day, (Reg. Guide 1.109, Rev. 1, Table E-2)

U_{ap} = Receptor's milk consumption rate, 330, 330, 400, 310 liters/yr for infant, child, teenager, and adult age groups, respectively (Reg. Guide 1.109, Rev. 1)

Y_p = agricultural productivity by unit area of pasture feed grass, 0.7 kg/m^2 (NUREG-0133)

Y_s = agricultural productivity by unit area of stored feed, 2.0 kg/m^2 (NUREG-0133)

F_m = stable element transfer coefficient (Table E-1, Reg. Guide 1.109, Rev. 1)

r = fraction of deposited activity retained in cow's feed grass, 0.2 for particulates, 1.0 for radioiodine (Table E-15, Reg. Guide 1.109, Rev. 1)

DFL_{iao} = the ingestion dose factor for organ, o, and the ith radionuclide for each respective age group, a (Tables E-11 to E-14, Reg. Guide 1.109, Rev. 1)

λ_i = decay constant for the ith radionuclide, sec^{-1}

λ_w = decay constant for weathering, 5.73 x 10^{-7} sec^{-1} (NUREG-0133); based on a 14 day half life

t_f = 1.73 x 10^5 sec, the transport time from pasture to cow to milk to receptor (Table E-15, Reg. Guide 1.109, Rev. 1), or 2 days

t_h = 7.78 x 10^6 sec, the transport time from pasture to harvest to cow to milk to receptor (Table E-15, Reg. Guide 1.109, Rev. 1), or 90 days

f_p = 1.0, the fraction of the year that the cow is on pasture

f_s = 1.0, the fraction of the cow feed that is pasture grass while the cow is on pasture

APPENDIX D (Cont'd)

The concentration of tritium in milk is based on the airborne concentration rather than the deposition. Therefore, R_i is based on (X/Q):

$$R^c_{i,a,o} = k'k''' F_m Q_s U_{ap} DFL_{i,a,o} (.75 [.5/H]) \quad \text{(Eq D-2)}$$

Where:

k''' = 1E3 grams/kg

H = 8 grams/m^3, absolute humidity of the atmosphere

.75 = fraction of the total feed grass mass that is water

.5 = ratio of the specific activity of the feed grass water to the atmospheric water (NUREG-0133)

$DFL_{i,a,o}$ = the ingestion dose factor for tritium and organ, o, for each respective age group, a (Tables E-11 to E-14, Reg. Guide 1.109, Rev. 1)

All other parameters and values are as given above.

NOTE

Goat-milk pathway factor, R_i, will be computed using the cow-milk pathway factor equation. F_m factor for goat-milk will be from Table E-2 Reg. Guide 1.109, Rev. 1.

Reference: ODCM Part I Tables 5.4.1 to 5.4.4

APPENDIX E

Ri - Cow-Meat Pathway Dose Factor

$$R_i = k' [(Q_c \times U_{ap}) / (\lambda_i + \lambda_w)] \times (F_i) \times (r) \times (DFL_{iao}) \times [((f_p \times t_p)/Y_p) + ((1-f_p f_s) e^{-\lambda_i t_h})/Y_s] \times e^{-\lambda_i t_f} \quad \text{(Eq E-1)}$$

Where:

k' = conversion factor, 1E6 picocurie/microcurie (pCi/μci)

Q_c = cow consumption rate, 50 kg/day, (Reg. Guide 1.109, Rev. 1)

U_{ap} = Receptor's meat consumption rate; 0, 41, 65, 110 kg/yr for infant, child, teenager, and adult age groups, respectively (Reg. Guide 1.109, Rev. 1)

F_i = the stable element transfer coefficients, days/kg (Table E-1, Reg. Guide 1.109, Rev. 1)

r = fraction of deposited activity retained in cow's feed grass, 0.2 for particulates, 1.0 for radiolodine (Table E-15, Reg. Guide 1.109, Rev. 1)

DFL_{iao} = the ingestion dose factor for organ, o, and the ith radionuclide for each respective age group, a (Tables E-11 to E-14, Reg. Guide 1.109, Rev. 1)

λ_i = decay constant for the radionuclide i, sec^{-1}

λ_w = decay constant for weathering, 5.73×10^{-7} sec^{-1} (NUREG-0133), based on a 14 day half life

t_p = 1.73×10^{6} sec, the transport time from pasture to receptor (NUREG-0133)

t_s = 7.78×10^{6} sec, the transport time from crop to receptor (NUREG-0133)

Y_p = agricultural productivity by unit area of pasture feed grass, 0.7 kg/m^2 (NUREG-0133)

Y_s = agricultural productivity by unit area of stored feed, 2.0 kg/m^2 (NUREG-0133)

f_p = 1.0, the fraction of the year that the cow is on pasture

f_s = 1.0, the fraction of the cow feed that is pasture grass while the cow is on pasture

The concentration of tritium in meat is based on the airborne concentration rather than the deposition. Therefore, R_i is based on (X/Q):

$$R_{iao} = k'k''' F_i Q_c U_{ap} (DFL_{iao}) \times 0.75 \times (0.5/H]) \quad \text{(Eq E-2)}$$

Where:

All terms are as defined above and in Appendix D.

Reference: ODCM Part I, Tables 5.6.1 to 5.6.4

APPENDIX F

Ri - Vegetation Pathway Dose Factor

$$R_i = k' \times [r/(Y_v(\lambda_i + \lambda_w))] \times (DFL_{iA}) \times [(U^L_A) f_L e^{-\lambda_i t_L} + U^S_A f_S e^{-\lambda_i t_h}] \quad \text{(Eq F-1)}$$

Where:

k' = 1E6 picocurie/microcurie (pCi/μci)

U^L_A = the consumption rate of fresh leafy vegetation, 0, 26, 42, 64 kg/yr for infant, child, teenager, or adult age groups, respectively (Reg. Guide 1.109, Rev. 1)

U^S_A = the consumption rate of stored vegetation, 0, 520, 630, 520 kg/yr for infant, child, teenager, or adult age groups respectively (Reg. Guide 1.109, Rev. 1)

f_L = the fraction of the annual intake of fresh leafy vegetation grown locally, = 1.0 (NUREG-0133)

f_S = the fraction of the stored vegetation grown locally = 0.76 (NUREG-0133)

t_L = the average time between harvest of leafy vegetation and its consumption, 8.6 x 10^4 seconds [Table E-15, Reg. Guide 1.109, Rev. 1 (24 hrs)]

t_h = the average time between harvest of stored leafy vegetation and its consumption, 5.18 x 10^6 seconds, [Table E-15, Reg. Guide 1.109, Rev. 1 (60 days)]

Y_v = the vegetation area density, 2.0 kg/m^2 (Table E-15, Reg. Guide 1.109, Rev. 1)

All other parameters are as previously defined.

The concentration of tritium in vegetation is based on the airborne concentration rather than the deposition. Therefore, R_i is based on (X/Q)

$$R_{iA} = k'k''' [U^L_A f_L + U^S_A f_S] (DFL_{iA}) (.75 [.5/H]) \quad \text{(Eq F-2)}$$

Where:

All terms are as defined above and in Appendix D.

Reference: ODCM Part I, Tables 5.7.1 to 5.7.4

APPENDIX A-F REFERENCES

(Page 1 of 4)

Parameters Used in Dose Factor Calculations

Parameter	Value	Origin of Value		
		Table in R.G. 1.109	Section of NUREG-0133	Site-Specific
	***** For P_i *****			
DFA	Each radionuclide	E-9		Note 1
BR	3700 m^3/yr (child)	E-5		
	*****For Ri (Vegetation)*****			
r	Each element type	E-1		
Y_v	2.0 kg/m^2	E-15		
λ_W	5.73 E-7 sec^{-1}		5.3.1.3	
DFL	Each age group and radionuclide	E-11 thru E-14		Note 1
U_a^1	Each age group	E-5		
f_1	1.0		5.3.1.5	
t_f	8.6 E + 4 seconds	E-15		
U_a^2	Each age group	E-5		
f_2	0.76		5.3.1.5	
t_e	5.18 E + 6 seconds	E-15		
H	8.0 grams/kg		5.2.1.3	
	*****For Ri (Inhalation)*****			
BR	Each age group	E-5		
DFA	Each age group and nuclide	E-7 thru E-10		Note 1

APPENDIX A-F REFERENCES

(Page 2 of 4)

Parameters Used in Dose Factor Calculations

Parameter	Value	Origin of Value		
		Table in R.G. 1.109	Section of NUREG-0133	Site-Specific
	***** For R_i (Ground Plane) *****			
SF	0.7	E-15		
DFG_i	Each radionuclide	E-6		
t	4.73 E + 8 sec		5.3.1.2	
	***** For Ri (Grass/Animal/Meat) *****			
Q_f(Cow)	50 kg/day	E-3		
Q_f (Goat)	6 kg/day	E-3		Ref. Only
U_{ap}	Each age group	E-5		
λw	5.73 E-7 sec^{-1}		5.3.1.3	
F_r (Both)	Each element	E-1		
r	Each element type	E-15		
DFL_i	Each age group and nuclide	E-11 thru E-14		Note 1
f_p	1.0		5.3.1.3	Note 2
f_s	1.0		5.3.1.3	Note 2
Y_p	0.7 kg/m^2	E-15		
t_p	7.78 E + 6 sec	E-15		
Y_s	2.0 kg/m^2	E-15		
t_s	1.73 E + 6 sec	E-15		
H	8.0 grams/kg		5.2.1.3	

APPENDIX A-F REFERENCES

(Page 3 of 4)

Parameters Used in Dose Factor Calculations

Parameter	Value	Origin of Value		
		Table in R.G. 1.109	Section of NUREG-0133	Site-Specific
	*** For R_i (Grass/Cow/Milk) ***			
Q_c	50 kg/day	E-3		
U_{ap}	Each age group	E-5		
λw	5.73 E-7 sec^{-1}		5.3.1.3	
F_m	Each element	E-1		
r	Each element type	E-15		
DFL_i	Each age group and nuclide	E-11 thru E-14		Note 1
Y_p	0.7 kg/m^2	E-15		
t_p	7.78 E + 6 sec	E-15		
Y_v	2.0 kg/m^2	E-15		
t_v	1.73 E + 5 sec	E-15		
f_p	1.0		5.3.1.3	
f_v	1.0		5.3.1.3	
H	8.0 grams/kg		5.2.1.3	

APPENDIX A-F REFERENCES

(Page 4 of 4)

NOTES

1. Inhalation and ingestion dose factors were taken from the indicated source. For each age group, for each nuclide, the organ dose factor used was the highest dose factor for that nuclide and age group in the referenced table.

2. Typically beef cattle are raised all year on pasture. Annual land surveys have indicated that the small number of goats raised within 5 miles typically are used for grass control and not food or milk. Nevertheless, the goats can be treated as full meat sources where present, despite the fact that their numbers cannot sustain the meat consumption rates of Table E-5, NUREG-0133.

REFERENCES

1. Regulatory Guide 1.109, "Calculation of Annual Doses to Man from Routine Releases of Reactor Effluents for the Purpose of Evaluating Compliance with 10 CFR Part 50, Appendix I," Revision 1, October 1977.

2. TMI-1 Technical Specifications, attached to Facility Operating License No. DPR-50.

3. NUREG-0133, "Preparation of Radiological Effluent Technical Specifications for Nuclear Power Plants," October 1978.